LOW VOLTAGE CIRCUIT BREAKER (CB). RATINGS AND NO. OF POLES AS SHOWN. WHEN SPECIFIC TYPE IS REQUIRED, X INDICATES TYPE.

TYPES:
MCCB – MOLDED CASE
ICCB – INSULATED CASE
LVP – LOW VOLTAGE POWER
MCP – MOTOR CIRCUIT PROTECTOR (RATING PER CONNECTED LOAD)

SEPARATELY MOUNTED CIRCUIT BREAKER, SEE ELECTRICAL ONE LINE DIAGRAM OR SCHEDULE FOR DESCRIPTION

GROUND FAULT PROTECTION

MEDIUM VOLTAGE CIRCUIT BREAKER

FUSE, SIZE AND NUMBER OF FUSES AS NOTED

FUSED CUTOUT, CURRENT RATING, FUSE SIZE AND NUMBER OF POLES AS NOTED

FUSIBLE SWITCH, CURRENT RATING, FUSE SIZE AND QUANTITY AS NOTED

NON–FUSED SWITCH, CURRENT RATING AND NUMBER OF POLES AS NOTED

DISCONNECT OR DRAWOUT CONNECTION

MAGNETIC MOTOR STARTER AND SEPARATELY MOUNTED COMBINATION MAGNETIC MOTOR STARTER.

MOTOR CONTROLLER AND SEPARATELY MOUNTED MOTOR CONTROLLER WITH SHORT CIRCUIT PROTECTION AND DISCONNECT.

MOTOR STARTER AND CONTROLLER SUBSCRIPTS:

A – MAGNETIC STARTER NEMA SIZE

B – STARTER TYPE
NONE – FULL VOLTAGE NON–REVERSING (FVNR)
FVR – FULL VOLTAGE REVERSING
2S – TWO SPEED
RVAT – REDUCED VOLTAGE AUTO TRANSFORMER

C – CONTROL DIAGRAM OR CONTROLS SCHEDULE NUMBER (IF REQUIRED)

D – CONTROLLER TYPE
VFD – VARIABLE FREQUENCY DRIVE
SS – SOLID STATE

SEPERATLY MOUNTED COMBINATION MOTOR STARTER OR CONTROLLER, SEE ELECTRICAL ONE LINE DIAGRAM OR SCHEDULE FOR DESCRIPTION

THERMAL OVERLOAD ELEMENT

THERMAL OVERLOAD RELAY CONTACT

DISCONNECT OR SAFETY SWITCH, 30A, 3P, NON–FUSED UNLESS OTHERWISE NOTED

MOTOR WITH DESIGN HORSEPOWER (WHEN INDICATED)

GENERATOR

TRANSFER SWITCH, CURRENT RATING AND NUMBER OF POLES AS NOTED.
ATS – AUTOMATIC
MTS – MANUAL

TRANSFORMER
3 PHASE, 3 WIRE DELTA CONNECTION
3 PHASE, 4 WIRE GROUNDED WYE CONNECTION

SWITCHBOARD OR PANELBOARD. NAME, VOLTAGE, PHASE, NUMBER OF WIRES WHEN INDICATED.

NON–MOTOR LOAD WITH DESIGN KVA, KW OR AMPS

CONTROL POWER TRANSFORMER (CPT)

VOLTAGE TRANSFORMER (VT OR PT)

CURRENT TRANSFORMER (CT)

UTILITY WATT–HOUR METER PER UTILITY REQUIREMENTS

DIGITAL METERING PACKAGE

RUN TIME METER

GROUND

LIGHTNING ARRESTER

LOW VOLTAGE SURGE PROTECTIVE DEVICE

ELECTRICAL CONNECTION

NO ELECTRICAL CONNECTION

SOLENOID VALVE

CONTROL/RELAY COIL, X INDICATES TYPE, Y INDICATES LOOP NO. WHEN USED

TYPES:
CR – CONTROL RELAY
DP – DEFINITE PURPOSE RELAY
LC – LIGHTING CONTACTOR
M – MOTOR STARTER
PC – PHOTO CELL
TC – TIME CLOCK
TR – TIMING RELAY

NORMALLY OPEN CONTACT (N.O.)

NORMALLY CLOSED CONTACT (N.C.)

NORMALLY OPEN TIME DELAY RELAY CONTACT, WITH TIME DELAY ON CLOSING AFTER COIL IS ENERGIZED

NORMALLY CLOSED TIME DELAY RELAY CONTACT, WITH TIME DELAY ON OPENING AFTER COIL IS ENERGIZED

NORMALLY OPEN TIME DELAY RELAY CONTACT, WITH TIME DELAY ON OPENING AFTER COIL IS DE–ENERGIZED

NORMALLY CLOSED TIME DELAY RELAY CONTACT, WITH TIME DELAY ON CLOSING AFTER COIL IS DE–ENERGIZED

NORMALLY OPEN TEMPERATURE SWITCH, CLOSE ON RISING TEMPERATURE

NORMALLY CLOSED TEMPERATURE SWITCH, OPEN ON RISING TEMPERATURE

NORMALLY OPEN FLOW SWITCH, CLOSE ON INCREASING FLOW

NORMALLY CLOSED FLOW SWITCH, OPEN ON INCREASING FLOW

NORMALLY OPEN LEVEL SWITCH, CLOSE ON RISING LEVEL

NORMALLY CLOSED LEVEL SWITCH, OPEN ON RISING LEVEL

NORMALLY OPEN PRESSURE SWITCH, CLOSE ON INCREASING PRESSURE

NORMALLY CLOSED PRESSURE SWITCH, OPEN ON INCREASING PRESSURE

NORMALLY OPEN LIMIT SWITCH, CLOSE ON REACHING LIMIT

NORMALLY CLOSED LIMIT SWITCH, OPEN ON REACHING LIMIT

INDICATES WIRING ENTERING OR LEAVING CONTROL PANEL

FIELD WIRING EXTERNAL TO CONTROL PANEL

INTERLOCK, X INDICATES TYPE

TYPES:
E – ELECTRICAL
M – MECHANICAL
K – KEY

3 POSITION SELECTOR SWITCH, MAINTAINED CONTACTS, UNLESS OTHERWISE NOTED, 2 POSITION SIMILAR

NORMALLY OPEN PUSHBUTTON, MOMENTARY CONTACT UNLESS OTHERWISE NOTED

NORMALLY CLOSED PUSHBUTTON, MOMENTARY CONTACT UNLESS OTHERWISE NOTED

INDICATING LIGHT, X INDICATES LENS COLOR

PUSH TO TEST INDICATING LIGHT, X INDICATES LENS COLOR

LENS COLORS:
R – RED
G – GREEN
B – BLUE
Y – YELLOW
W – WHITE
A – AMBER

TRANSFORMER

SELECTOR SWITCH

PUSHBUTTON

INSTRUMENTATION/CONTROL DEVICE

CONTROL PANEL INTEGRAL OR PROVIDED WITH ASSOCIATED EQUIPMENT

CONTROL PANEL WITH DISCONNECT SWITCH INTEGRAL OR PROVIDED WITH ASSOCIATED EQUIPMENT

JUNCTION OR PULL BOX

PANELBOARD (250V TO 600V)

PANELBOARD (LESS THAN 250V)

ELECTRICAL EQUIPMENT ENCLOSURE: SWITCHBOARD, MOTOR CONTROL CENTER, CONTROL PANEL OR OTHER EQUIPMENT AS INDICATED

PHOTOCELL

CEILING/PENDANT MOUNTED LUMINAIRE – HID, COMPACT FLUORESCENT OR INCANDESCENT

WALL MOUNTED LUMINAIRE – HID, COMPACT FLUORESCENT OR INCANDESCENT

CEILING/PENDANT MOUNTED FLUORESCENT FIXTURE

WALL MOUNTED FLUORESCENT FIXTURE

CEILING/PENDANT MOUNTED FLUORESCENT FIXTURE NORMAL/EMERGENCY

WALL MOUNTED FLUORESCENT FIXTURE NORMAL/EMERGENCY

EMERGENCY LIGHT FIXTURE, 2 ATTACHED HEADS AS SHOWN

EMERGENCY LIGHT, REMOTE MOUNTED HEAD

DOUBLE FACED CEILING OR WALL MOUNTED EXIT LIGHT, DIRECTIONAL ARROWS (IF REQUIRED) AS INDICATED ON PLANS

SINGLE FACED CEILING OR WALL MOUNTED EXIT LIGHT, DIRECTIONAL ARROWS (IF REQUIRED) AS INDICATED ON PLANS

AREA OR ROADWAY LIGHT – POLE MOUNTED

LIGHTING FIXTURE SUBSCRIPTS:
X – INDICATES FIXTURE TYPE PER LIGHTING FIXTURE SCHEDULE
Y – INDICATES CIRCUIT NUMBER FROM PANELBOARD
z – INDICATES CONTROLLING SWITCH (IF REQUIRED)

TOGGLE SWITCH

SUBSCRIPTS:
X – INDICATES TYPE
NONE NONE – SINGLE POLE
3 – THREE–WAY
4 – FOUR–WAY
HP – TOGGLE SWITCH, HORSEPOWER RATED
K – KEY SWITCH
TE – MANUAL MOTOR STARTER WITH THERMAL ELEMENT
P – PILOT LIGHT
L – LIGHTED HANDLE
Y – INDICATES CONTROLLING SWITCH (IF REQUIRED)

SPECIAL PURPOSE RECEPTACLE AS DEFINED ON PLANS

PLUG–IN RECEPTACLE STRIP, QUANTITY AND SPACING OF RECEPTACLES AS NOTED OR SPECIFIED

TELECOMMUNICATIONS OUTLET JUNCTION BOX

QUAD–DUPLEX RECEPTACLE, TWO NEMA 5–20R UNDER COMMON COVER PLATE.

DUPLEX RECEPTACLE, NEMA 5–20R

SIMPLEX RECEPTACLE, NEMA 5–20R

SUBSCRIPTS:
X – INDICATES TYPE
GFCI – GROUND FAULT CIRCUIT INTERRUPTER
Y – INDICATES CIRCUIT NUMBER FROM PANELBOARD

CONDUIT TURNING UP

CONDUIT TURNING DOWN

HOME RUN TO PANEL, 2 #12, 1 #12G IN 3/4"C UNLESS OTHERWISE NOTED

CIRCUIT RUN BETWEEN DEVICES EXPOSED IN NON–ARCHITECTURALLY FINISHED AREAS, CONCEALED IN ARCHITECTURALLY FINISHED AREAS. CONDUIT AND CONDUCTOR SIZES SHALL BE THE SAME AS THE HOMERUN FOR THE CIRCUIT

CONDUIT RUN BETWEEN DEVICES CONCEALED IN NON–ARCHITECTURALLY FINISHED AREAS OR UNDER FLOOR SLAB. CONDUIT AND CONDUCTOR SIZES SHALL BE THE SAME AS THE HOMERUN FOR THE CIRCUIT.

CIRCUIT HASH MARKS (WHEN INDICATED), LONG, SHORT, SINGLE DOT AND DOUBLE DOT REPRESENT PHASE, NEUTRAL, EQUIPMENT GROUND AND ISOLATED EQUIPMENT GROUND RESPECTIVELY. #12 IN 3/4" CONDUIT UNLESS OTHERWISE INDICATED

CIRCUIT CONTINUATION

CONDUIT STUBBED OUT AND CAPPED

CONDUIT TAG OR CIRCUIT NUMBER – WIRE AND CONDUIT SIZE AS SPECIFIED IN CIRCUIT SCHEDULE ON THE DRAWINGS

FIRE ALARM ANNUNCIATOR

FIRE ALARM CONTROL PANEL

FIRE ALARM MANUAL PULL STATION

FIRE ALARM CONTROL RELAY

FIRE ALARM CONTACT, FLOW SWITCH

FIRE ALARM CONTACT, TAMPER SWITCH

FIRE ALARM CONTACT, PRESSURE SWITCH

SMOKE AND DUCT DETECTOR

SUBCRIPT:
I – IONIZATION TYPE
P – PHOTOELECTRIC TYPE

HEAT DETECTOR

SUBCRIPT:
R/C – RATE COMPENSATION
R/F – COMBINATION RATE OF RISE AND FIXED TEMP
R – RATE OF RISE
F – FIXED

ALARM BELL

ALARM HORN

ALARM FLASHING LIGHT

ALARM BELL AND FLASHING LIGHT COMBINATION UNIT

ALARM HORN AND FLASHING LIGHT COMBINATION UNIT

SUBCRIPT:
NONE – GENERAL ALARM DEVICE
F – FIRE ALARM DEVICE

GROUND CABLE

GROUND ROD

UNDERGROUND DUCTBANK, CONCRETE ENCASED UNLESS NOTED OTHERWISE

GENERAL NOTES:

1. THIS IS A STANDARD ELECTRICAL SYMBOLS SHEET. ALL SYMBOLS MAY NOT BE USED ON THIS PROJECT.
2. IN GENERAL CONDUIT ROUTING IS NOT SHOWN ON THE PLANS. THE CONTRACTOR SHALL BE RESPONSIBLE FOR ROUTING ALL CONDUITS INCLUDING THOSE SHOWN ON ONE–LINES AND HOME RUNS. SEE SPECIFICATIONS FOR CONDUIT INSTALLATION REQUIREMENTS. CONDUIT ROUTINGS AND STUB–UP LOCATIONS THAT ARE SHOWN ARE APPROXIMATE, EXACT ROUTINGS SHALL BE AS REQUIRED FOR EQUIPMENT FURNISHED.
3. WHEN BRANCH CIRCUITS ARE NOT SHOWN ON THE PLANS THE CONTRACTOR SHALL FURNISH AND INSTALL ALL CONDUITS AND CONDUCTORS REQUIRED. CONDUIT AND CONDUCTOR SIZES SHALL BE THE SAME AS THE HOMERUN FOR THE BRANCH CIRCUIT.
4. SCREENING OR SHADING OF WORK IS USED TO INDICATE EXISTING COMPONENTS OR TO DE–EMPHASIZE PROPOSED IMPROVEMENTS TO HIGHLIGHT SELECTED TRADE WORK. REFER TO CONTEXT OF EACH DRAWING FOR USAGE.
5. SEE PROJECT EQUIPMENT AND PIPING SYSTEMS DRAWING FOR SYMBOLS AND ABBREVIATIONS SPECIFIC TO THE PROJECT.

Issue No.	Description	Date	Drwn.	Chkd.	Resp. Engr.	Proj. Mgr.
–	–	–	–	–	–	–
–	–	–	–	–	–	–
–	–	–	–	–	–	–
–	–	–	–	–	–	–
1	REVISED PRIOR TO FINAL BID ISSUE	07/14/04	SWC	DFB	TLG	MCG
0	ISSUED FOR BID	6/02/04	SWC	DFB	TLG	MCG

David F. Besinger 7-14-04
STATE OF TEXAS
DAVID F. BESINGER
52236
REGISTERED PROFESSIONAL ENGINEER

HDR Engineering, Inc.

BAR LENGTH ON ORIGINAL DRAWING EQUALS ONE INCH. ADJUST SCALE ACCORDINGLY.

Project Manager: M. C. GRAVES
Designed: T. L. GLAUM
Designed:
Checked: D. F. BESINGER
Drawn: S. W. CAMPBELL

WATER TREATMENT PLANT EXPANSION 2004
THE CITY OF KERRVILLE, TEXAS

GENERAL ELECTRICAL
LEGEND AND ABBREVIATIONS

Date: JUNE, 2004
Scale: NOT TO SCALE
Project No.: 08340–025–036
File Name: 00E–01.dwg
Drawing No.: 00E-01
Issue: 1

C:\WINDM\0011120036\DWG\00E-01.DWG, 00E-01, 7/13/2004 11:49:35 AM, scampbel

PRIMARY ELEMENT SYMBOLOGY

- ORIFICE PLATE
- PITOT TUBE OR ANNUBAR
- FI — ROTOMETER
- SONIC OR ULTRASONIC FLOWMETER
- M — MAGNETIC FLOWMETER
- FT — MASS DISPERSION FLOWMETER
- FLUME
- WEIR
- PROPELLER OR TURBINE METER
- VENTURI TUBE
- FLOAT SWITCH
- TE — TEMPERATURE ELEMENT WITH THERMOWELL
- FG — SIGHT FLOW GLASS

LINE TYPES

- MAIN PROCESS LINE
- SECONDARY PROCESS LINE
- AUXILIARY PROCESS LINE
- DIRECTION OF FLOW
- PNEUMATIC SIGNAL
- ELECTRICAL SIGNAL
- HYDRAULIC SIGNAL
- SOFTWARE OR DATA LINK
- SIGNAL CONNECTION
- CROSSOVER – NO CONNECTION
- CAPILLARY

CROSS REFERENCE SYMBOLOGY

- I-3 — CONTINUATION ON DRAWING I-3
- I-3 — CONTINUATION ON DRAWING I-3

INSTRUMENT SYMBOLOGY

- LOCALLY MOUNTED FIELD INSTRUMENTATION
- MOUNTED ON PANEL FRONT
- MOUNTED INSIDE PANEL
- XXX — FRONT PANEL MOUNTED ON AUXILIARY PANEL (SUBSCRIPT INDICATES PANEL)
- MOUNTED INSIDE AUXILIARY PANEL
- PILOT LIGHT
- INSTRUMENT FUNCTIONS SHARING COMMON HOUSING
- COMPLEX INTERLOCK AS DEFINED IN CONTROL DIAGRAM OR IN SPECIFICATIONS
- SHARED DISPLAY, SHARED CONTROL, FIELD MOUNTED
- SHARED DISPLAY, SHARED CONTROL, PRIMARY LOCATION – NORMALLY ACCESSIBLE TO OPERATOR
- PROGRAMMABLE LOGIC CONTROL, PRIMARY LOCATION – NORMALLY ACCESSIBLE TO OPERATOR
- PROGRAMMABLE LOGIC CONTROL, FIELD MOUNTED

ACTUATOR SYMBOLOGY

- OPERATOR ABBREVIATIONS:
  - M = MOTOR
  - P = PNEUMATIC
  - S = SOLENOID
- FLOAT OPERATOR
- SPRING OPPOSED SINGLE ACTING PNEUMATIC CYLINDER
- DOUBLE ACTING PNEUMATIC CYLINDER
- PNEUMATIC DIAPHRAGM
- PNEUMATIC DIAPHRAGM WITH POSITIONER

TYPES OF POWER SUPPLY

A	PLANT COMPRESSED AIR
IA	INSTRUMENTATION AIR
ES	ELECTRIC SUPPLY
NG	NATURAL GAS
HYD	HYDRAULIC

INSTRUMENT IDENTIFICATION LETTERS

	FIRST LETTER		SUCCEEDING LETTERS		
	MEASURED OR INITIATING VARIABLE	MODIFIER	READOUT OR PASSIVE FUNCTION	OUTPUT FUNCTION	MODIFIER
A	ANALYSIS		ALARM		
B	BURNER, COMBUSTION		USERS CHOICE	USERS CHOICE	USERS CHOICE
C	USERS CHOICE			CONTROL	CLOSED
D	USERS CHOICE	DIFFERENTIAL			
E	VOLTAGE		SENSOR (PRIMARY ELEMENT)		
F	FLOW RATE	RATIO (FRACTION)			
G	USER'S CHOICE		GLASS, VIEWING DEVICE		
H	HAND				HIGH
I	CURRENT (ELECTRICAL)		INDICATE		
J	POWER	SCAN			
K	TIME, TIME SCHEDULE	TIME RATE OF CHANGE		CONTROL STATION	
L	LEVEL		LIGHT		LOW
M	USER'S CHOICE	MOMENTARY			MIDDLE, INTERMEDIATE
N	USER'S CHOICE		USER'S CHOICE	USER'S CHOICE	USER'S CHOICE
O	USER'S CHOICE		ORIFICE, RESTRICTION		
P	PRESSURE, VACUUM		POINT (TEST) CONNECTION		
Q	QUANTITY	INTEGRATE, TOTALIZE			
R	RADIATION		RECORD		
S	SPEED, FREQUENCY	SAFETY		SWITCH	
T	TEMPERATURE			TRANSMIT	
U	MULTIVARIABLE		MULTIFUNCTION	MULTIFUNCTION	MULTIFUNCTION
V	VIBRATION, MECH. ANALYSIS			VALVE, DAMPER, LOUVER	
W	WEIGHT, FORCE		WELL		
X	UNCLASSIFIED	X AXIS	UNCLASSIFIED	UNCLASSIFIED	UNCLASSIFIED
Y	EVENT, STATE OR PRESENCE	Y AXIS		RELAY, COMPUTE, CONVERT	
Z	POSITION, DIMENSION	Z AXIS		DRIVER, ACTUATOR, UNCLASSIFIED FINAL CONTROL ELEMENT	

MISCELLANEOUS INSTRUMENTATION ABBREVIATIONS

AI	ANALOG INPUT
AO	ANALOG OUTPUT
CL2	CHLORINE (ANALYZER MODIFIER)
CO	CARBON MONOXIDE (ANALYZER MODIFIER)
CO2	CARBON DIOXIDE (ANALYZER MODIFIER)
COMB	COMBUSTIBLES (ANALYZER MODIFIER)
COND	CONDUCTIVITY (ANALYZER MODIFIER)
DEN	DENSITY (ANALYZER MODIFIER)
DI	DIGITAL INPUT
DO	DIGITAL OUTPUT
DO	DISSOLVED OXYGEN (ANALYZER MODIFIER)
E/P	VOLTAGE TO PNEUMATIC
H2S	HYDROGEN SULFIDE (ANALYZER MODIFIER)
HCL	HYDROGEN CHLORIDE (ANALYZER MODIFIER)
I/O	INPUT/OUTPUT
I/P	CURRENT TO PNEUMATIC
NOX	NITROGEN OXIDE (ANALYZER MODIFIER)
OI	OPERATOR INTERFACE
O2	OXYGEN (ANALYZER MODIFIER)
P&ID	PROCESS AND INSTRUMENTATION DIAGRAM
SS	SUSPENDED SOLIDS (ANALYZER MODIFIER)
TURB	TURBIDITY (ANALYZER MODIFIER)
WAN	WIDE AREA NETWORK

CONTROL SWITCH NOTATION ABBREVIATIONS

XXX/XXXX — XXX

ACK	ACKNOWLEDGE
ESTOP	EMERGENCY STOP
FAIL	FAILURE
FOR	FORWARD–OFF–REVERSE
FR	FORWARD–REVERSE
FS	FAST–SLOW
HA	HAND–AUTO
HOA	HAND–OFF–AUTO
HOR	HAND–OFF–REMOTE
LL	LEAD–LAG
LLS	LEAD–LAG–STANDBY
LOR	LOCAL–OFF–REMOTE
LR	LOCAL–REMOTE
LS	LEAD–STANDBY
MA	MANUAL–AUTO
OAC	OPEN–AUTO–CLOSE
OC	OPEN–CLOSE
OSC	OPEN–STOP–CLOSE
RJ	RUN–JOG
RJR	RUN–JOG–REVERSE
SIL	SILENCE
SS	START–STOP

VALVES

- BALL VALVE
- BUTTERFLY VALVE
- CONE VALVE
- CHECK VALVE
- DOUBLE DISK CHECK VALVE
- BALL CHECK VALVE
- DIAPHRAGM VALVE
- GATE VALVE
- GLOBE VALVE
- KNIFE GATE VALVE
- NEEDLE VALVE
- PINCH VALVE
- PLUG VALVE
- THREE WAY BALL VALVE
- THREE WAY PLUG VALVE
- PRESSURE REDUCING VALVE
- PRESSURE REGULATING VALVE
- OR — PRESSURE RELIEF VALVE
- X — AIR RELEASE VACUUM VALVE
  - A = AIR RELEASE
  - V = VACUUM

MISCELLANEOUS P & ID SYMBOLOGY

GENERAL NOTES:

1. THIS IS A STANDARD INSTRUMENTATION SYMBOLS AND ABBREVIATION SHEET. LISTING OF SYMBOLS AND ABBREVIATIONS DOES NOT IMPLY ALL SYMBOLS AND ABBREVIATIONS HAVE BEEN USED ON THIS PROJECT.
2. SEE GENERAL SYMBOL SHEET FOR MISCELLANEOUS PIPING SYMBOLS.
3. SCREENING OR SHADING OF WORK IS USED TO INDICATE EXISTING COMPONENTS OR TO DE-EMPHASIZE PROPOSED IMPROVEMENTS TO HIGHLIGHT SELECTED TRADE WORK, REFER TO CONTEXT OF EACH SHEET FOR USAGE.
4. VALVE SYMBOLS SHOWN HERE ARE APPLICALBE ONLY TO P&ID'S. SEE GENERAL SYMBOL SHEET FOR VALVE SYMBOLS USED ELSEWHERE ON THE SHEETS.

Issue No.	Description	Date	Drwn.	Chkd.	Resp. Engr.	Proj. Mgr.
–	–	–	–	–	–	–
–	–	–	–	–	–	–
–	–	–	–	–	–	–
–	–	–	–	–	–	–
1	REVISED PRIOR TO FINAL BID ISSUE	07/14/04	SWC	DFB	TLG	MCG
0	ISSUED FOR BID	6/02/04	SWC	DFB	TLG	MCG

STATE OF TEXAS — DAVID F. BESINGER — 52236 — REGISTERED PROFESSIONAL ENGINEER — 7-14-04

HDR Engineering, Inc.

BAR LENGTH ON ORIGINAL DRAWING EQUALS ONE INCH. ADJUST SCALE ACCORDINGLY.

Project Manager: M. C. GRAVES
Designed: T. L. GLAUM
Designed:
Checked: D. F. BESINGER
Drawn: S. W. CAMPBELL

WATER TREATMENT PLANT EXPANSION 2004

THE CITY OF KERRVILLE, TEXAS

GENERAL INSTRUMENTATION

LEGEND AND ABBREVIATIONS

Date	Project No.	Drawing No.	Issue
JUNE, 2004	08340-025-036	00E-02	1
Scale: NOT TO SCALE	File Name: 00E-02.dwg		

C:\WINDM\00111120036\DWG\00E-02.DWG, 00E-02, 7/13/2004 11:49:47 AM, scampbel

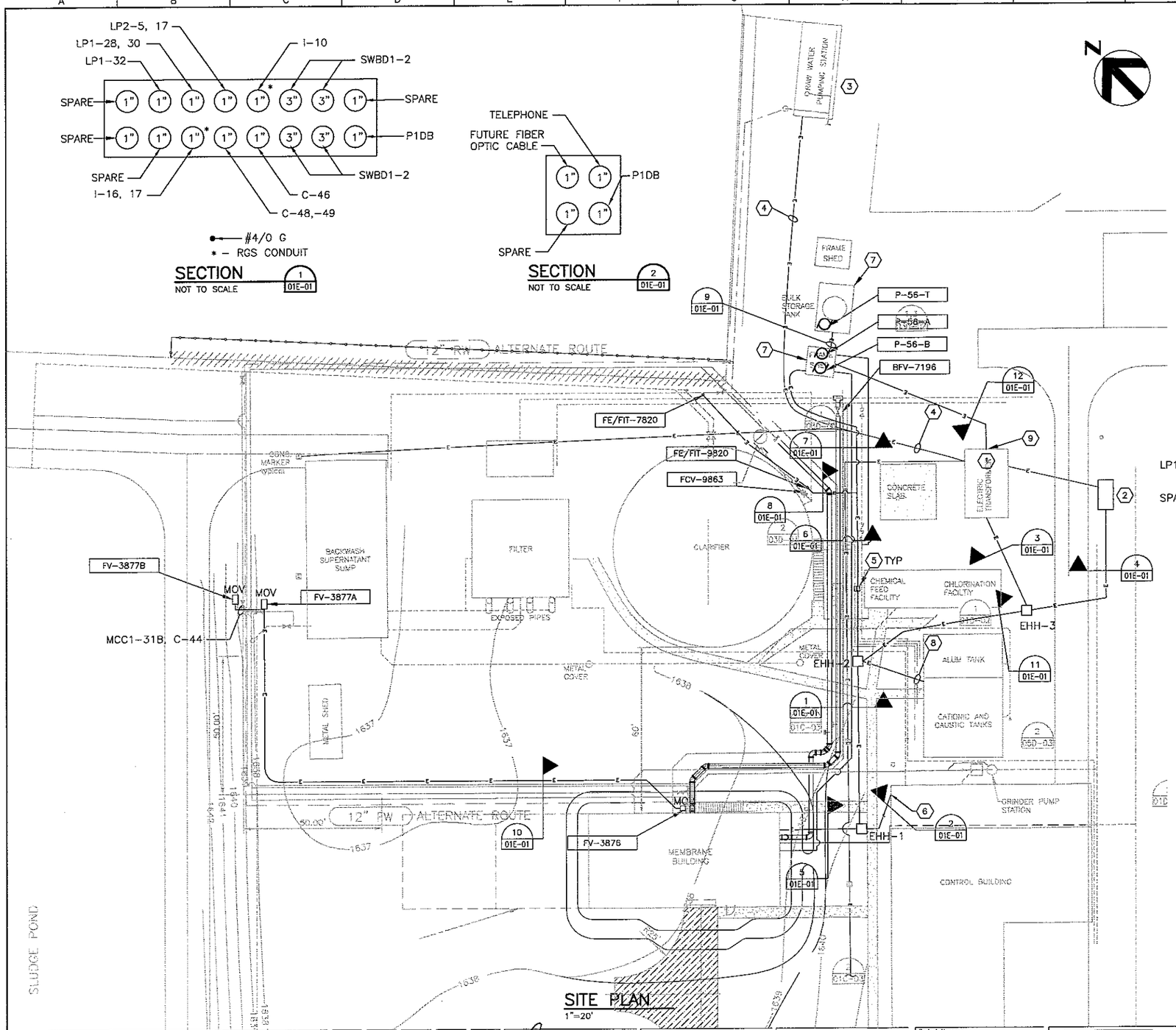

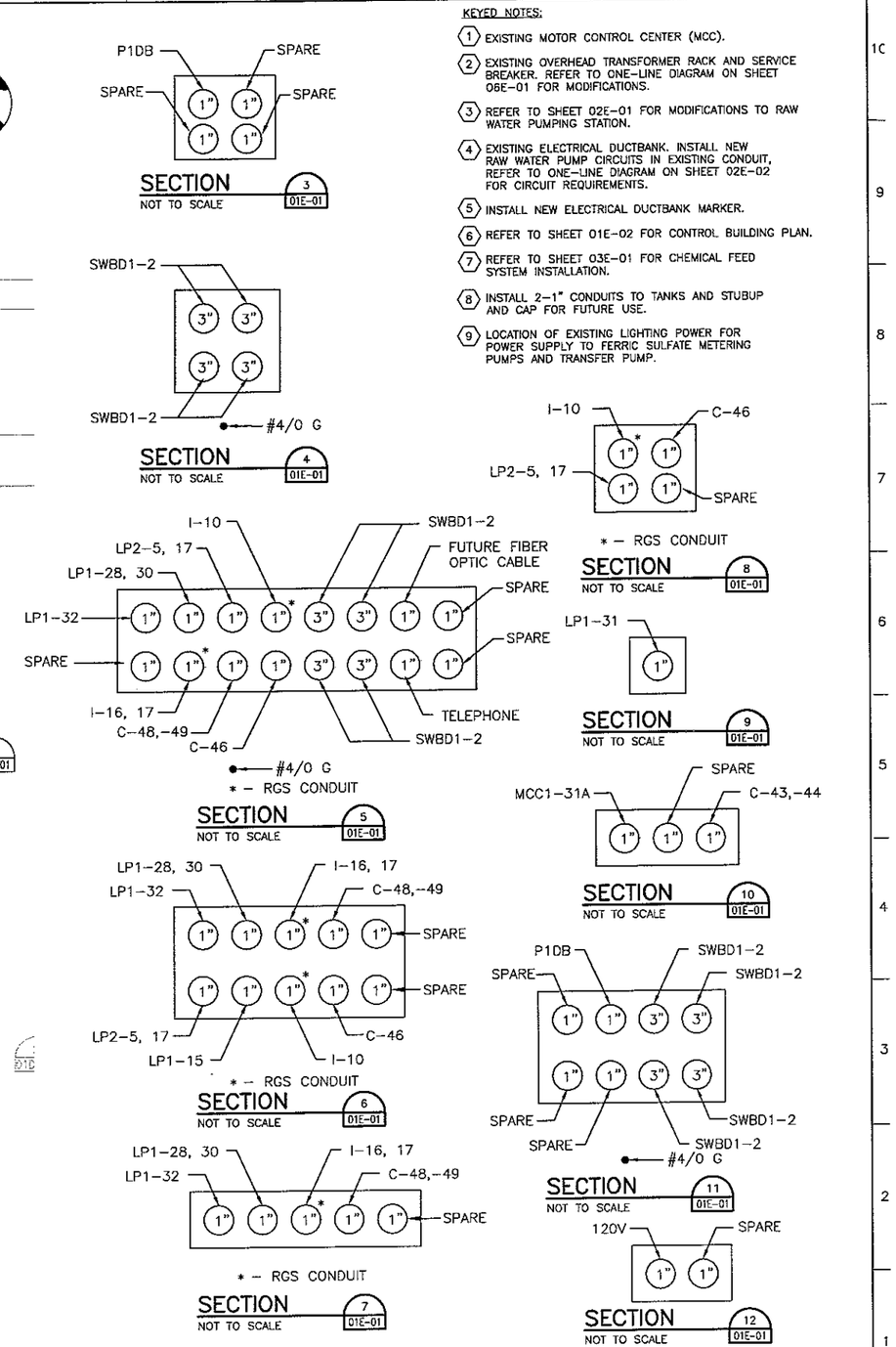

KEYED NOTES:

1. EXISTING MOTOR CONTROL CENTER (MCC).
2. EXISTING OVERHEAD TRANSFORMER RACK AND SERVICE BREAKER. REFER TO ONE-LINE DIAGRAM ON SHEET 06E-01 FOR MODIFICATIONS.
3. REFER TO SHEET 02E-01 FOR MODIFICATIONS TO RAW WATER PUMPING STATION.
4. EXISTING ELECTRICAL DUCTBANK. INSTALL NEW RAW WATER PUMP CIRCUITS IN EXISTING CONDUIT, REFER TO ONE-LINE DIAGRAM ON SHEET 02E-02 FOR CIRCUIT REQUIREMENTS.
5. INSTALL NEW ELECTRICAL DUCTBANK MARKER.
6. REFER TO SHEET 01E-02 FOR CONTROL BUILDING PLAN.
7. REFER TO SHEET 03E-01 FOR CHEMICAL FEED SYSTEM INSTALLATION.
8. INSTALL 2-1" CONDUITS TO TANKS AND STUBUP AND CAP FOR FUTURE USE.
9. LOCATION OF EXISTING LIGHTING POWER FOR POWER SUPPLY TO FERRIC SULFATE METERING PUMPS AND TRANSFER PUMP.

Issue No.	Description	Date	Drwn.	Chkd.	Resp. Engr.	Proj. Mgr.
–	–	–	–	–	–	–
–	–	–	–	–	–	–
–	–	–	–	–	–	–
–	–	–	–	–	–	–
1	REVISED PRIOR TO FINAL BID ISSUE	07/14/04	SWC	DFB	TLG	MCG
0	ISSUED FOR BID	6/02/04	SWC	DFB	TLG	MCG

David F. Besinger 5-14-04
STATE OF TEXAS
DAVID F. BESINGER
52236
REGISTERED PROFESSIONAL ENGINEER

HDR Engineering, Inc.

ONE LENGTH ON ORIGINAL DRAWING EQUALS ONE INCH. ADJUST SCALE ACCORDINGLY.

Project Manager: M. C. GRAVES
Designed: T. L. GLAUM
Designed:
Checked: D. F. BESINGER
Drawn: S. W. CAMPBELL

WATER TREATMENT PLANT EXPANSION 2004

THE CITY OF KERRVILLE, TEXAS

SITE WORK ELECTRICAL

SITE ELECTRICAL PLAN

Date	Project No.	Drawing No.	Issue
JUNE, 2004	08340-025-035	01E-01	1
Scale: AS NOTED	File Name: 01E-01.dwg		

C:\WINDM\001112003\6\DWG\01E-01.DWG, 01E-01, 7/13/2004 11:50:00 AM, scampbel

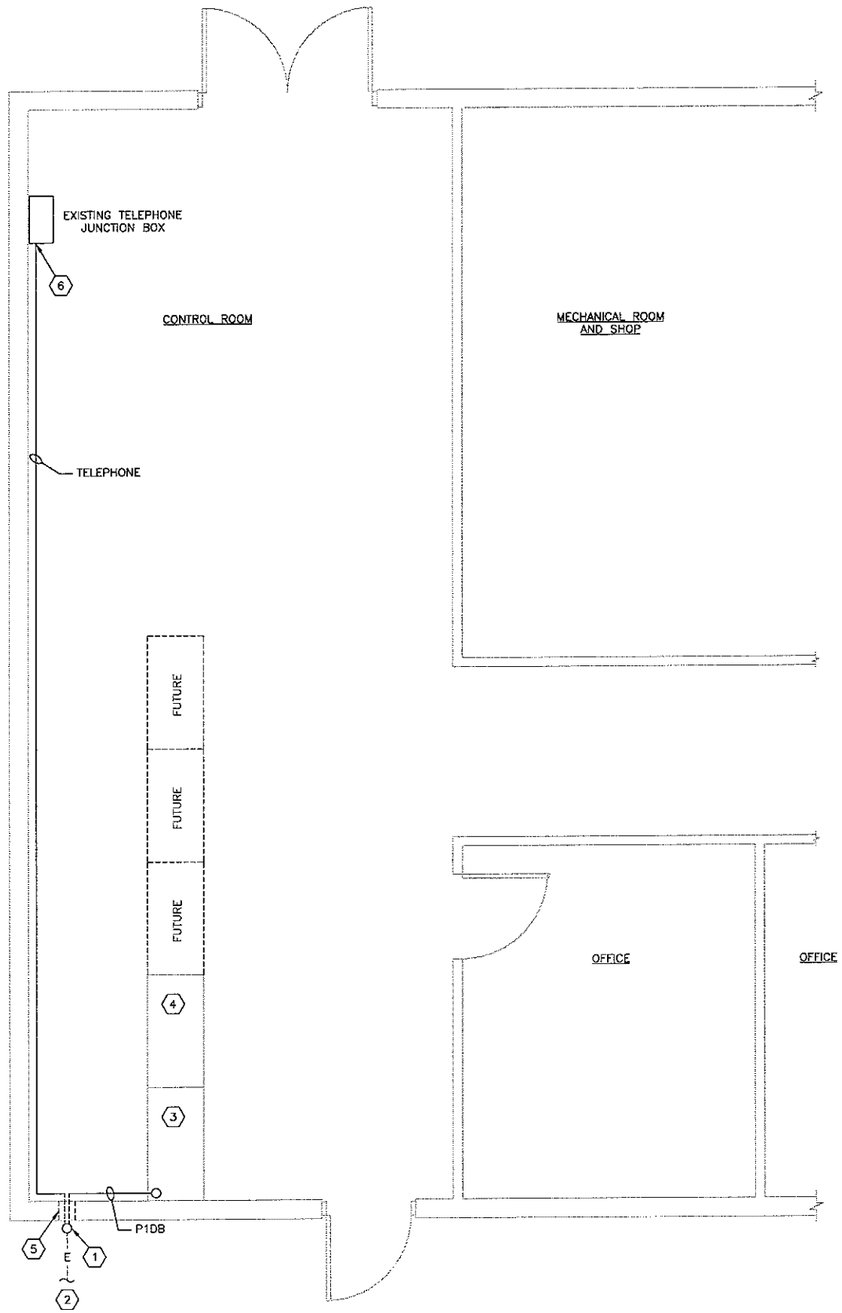

PARTIAL FLOOR PLAN

3/8"=1'-0"

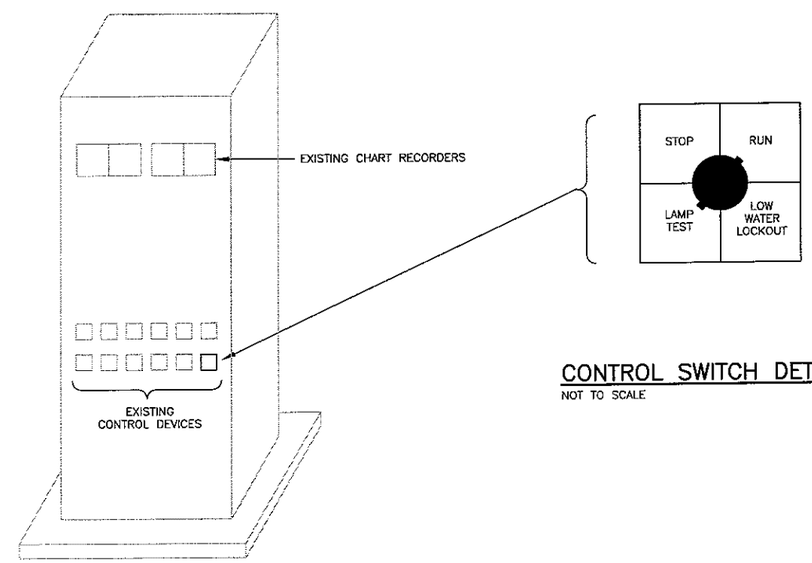

PUMP CONTROL PANEL

8

NOT TO SCALE

CONTROL SWITCH DETAIL

7

NOT TO SCALE

KEYED NOTES:

1. STUB UP AND CAP SPARE CONDUITS AND CONDUIT FOR FUTURE FIBER OPTIC CABLE.
2. DUCTBANK CONTINUATION AND DUCTBANK SECTION SHOWN ON SHEET 01E-01.
3. EXISTING PUMP CONTROL PANEL.
4. EXISTING WATER TREATMENT PANEL.
5. EXISTING OPENING IN CONCRETE WALL FOR USE IN ROUTING CONDUIT.
6. CONTRACTOR TO INSTALL CONDUIT AND TELEPHONE LINE. OWNER TO CONNECT TELEPHONE LINE IN EXISTING JUNCTION BOX.
7. INSTALL START/STOP CONTROL SWITCH FOR RAW WATER PUMP P-1D WITH INDICATING LIGHTS. WIRE LIGHTS INTO EXISTING PANEL CONTROL POWER. USE EXISTING CUTOUT IN PANEL. SWITCH SHALL MATCH EXISTING SWITCHES IN APPEARANCE AND FUNCTION. SEE DETAIL THIS SHEET.
8. EXISTING PUMP CONTROL PANEL LOCATED IN ADMINISTRATION BUILDING CONTROL ROOM.

Issue No.	Description	Date	Drwn.	Chkd.	Resp. Engr.	Proj. Mgr.
–	–	–	–	–	–	–
–	–	–	–	–	–	–
–	–	–	–	–	–	–
–	–	–	–	–	–	–
1	REVISED PRIOR TO FINAL BID ISSUE	07/14/04	SWC	DFB	TLG	MCG
0	ISSUED FOR BID	6/02/04	SWC	DFB	TLG	MCG

David F. Besinger 7-14-04
STATE OF TEXAS
DAVID F. BESINGER
52236
REGISTERED PROFESSIONAL ENGINEER

HDR Engineering, Inc.

SHA LENGTH ON ORIGINAL DRAWING EQUALS ONE INCH. ADJUST SCALE ACCORDINGLY.

Project Manager: M. C. GRAVES
Designed: T. L. GLAUM
Designed:
Checked: D. F. BESINGER
Drawn: S. W. CAMPBELL

WATER TREATMENT PLANT EXPANSION 2004

THE CITY OF KERRVILLE, TEXAS

CONTROL BUILDING ELECTRICAL

PARTIAL FLOOR PLAN & DETAILS

Date	Project No.	Drawing No.	Issue
JUNE, 2004	08340-025-036	01E-02	1
Scale: AS NOTED	File Name: 01E-02.dwg		

C:\WINDM\001111200036\DWG\01E-02.DWG, 01E-02, 7/13/2004 11:50:07 AM, scampbel

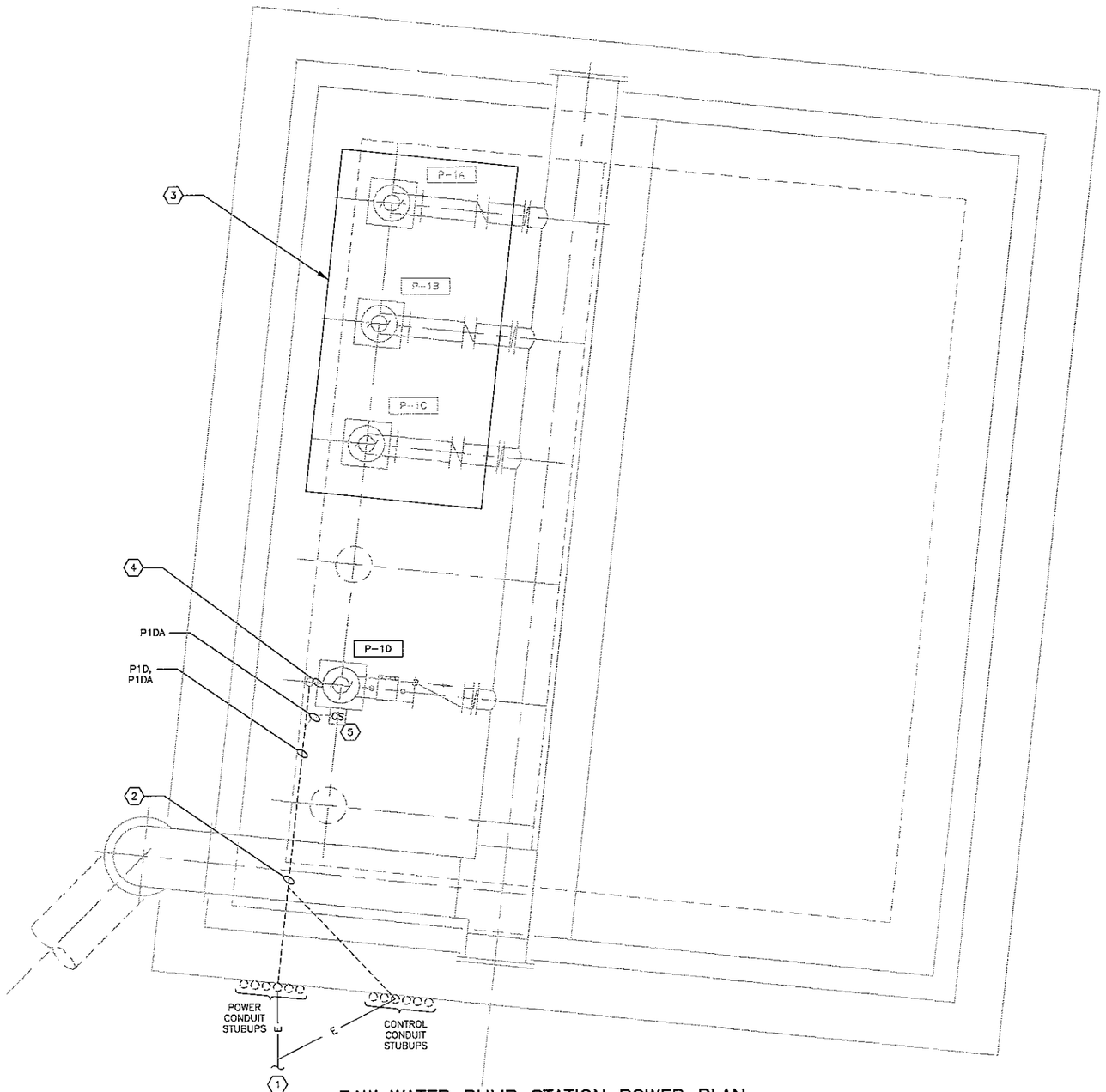

RAW WATER PUMP STATION POWER PLAN

KEYED NOTES:

1. EXISTING DUCTBANK ROUTING CONTINUED TO EXISTING MCC. SEE SHEET 01E-01. CONTRACTOR SHALL FIELD DETERMINE WHICH CONDUITS TO USE FROM AVAILABLE SPARES.
2. EXISTING CONCEALED POWER AND CONTROL CONDUIT IN CONCRETE SLAB.
3. EXISTING RAW WATER PUMP STATION SHED TO REMAIN.
4. EXTEND EXISTING CONDUIT TO NEW PUMP MOTOR. REFER TO ONE-LINE DIAGRAM FOR CIRCUIT REQUIREMENTS.
5. INSTALL CONTROL STATION AND CONTROL WIRING. ADD JUNCTION BOX BELOW CONTROL STATION AND TAPE/COIL SPARE CONTROL WIRING HERE.

Issue No.	Description	Date	Drwn.	Chkd.	Resp. Engr.	Proj. Mgr.
–	–	–	–	–	–	–
–	–	–	–	–	–	–
–	–	–	–	–	–	–
–	–	–	–	–	–	–
1	REVISED PRIOR TO FINAL BID ISSUE	07/14/04	SWC	DFB	TLG	MCG
0	ISSUED FOR BID	6/02/04	SWC	DFB	TLG	MCG

David F. Besinger 7-14-04
STATE OF TEXAS
DAVID F. BESINGER
52236
REGISTERED PROFESSIONAL ENGINEER

HDR Engineering, Inc.

BAR LENGTH ON ORIGINAL DRAWING EQUALS ONE INCH. ADJUST SCALE ACCORDINGLY.

Project Manager: M. C. GRAVES
Designed: T. L. GLAUM
Designed:
Checked: D. F. BESINGER
Drawn: S. W. CAMPBELL

WATER TREATMENT PLANT EXPANSION 2004

THE CITY OF KERRVILLE, TEXAS

RAW WATER PUMP STATION ELECTRICAL

ELECTRICAL PLAN

Date	Project No.	Drawing No.	Issue
JUNE, 2004	08340-025-036	02E-01	1
Scale: 3/8"=1'-0"	File Name: 02E-01.DWG		

C:\WINDM\00111120036\DWG\02E-01.DWG, 02E-01, 7/13/2004 11:50:19 AM, scampbel

DEVICE LOCATION LEGEND

△ LOCATED AT OR NEAR PUMP MOTOR.

⊠ LOCATED IN PUMP CONTROL PANEL. (4)

KEYED NOTES:

(1) EXISTING MOTOR CONTROL CENTER IS BY SQUARE D. IT IS BACK-TO-BACK CONSTRUCTION. FACTORY ORDER #45-73992-1. INSTALL NEW MOTOR STARTER FOR RAW WATER PUMP P-1D IN EXISTING SPACE. MATCH FAULT RATING TO EXISTING BUS FAULT INTERRUPTING RATING. COVER UNUSED SPACE WITH BLANK COVER PLATE.

(2) INSTALL START/STOP CONTROL SWITCH FOR RAW WATER PUMP P-1D WITH INDICATING LIGHTS. WIRE LIGHTS INTO EXISTING PANEL CONTROL POWER. CONTRACTOR TO FIELD VERIFY.

(3) USE EXISTING EMPTY CONDUIT IN EXISTING DUCTBANK FROM MCC TO RAW WATER PUMP STATION FOR CIRCUITS TO NEW PUMP MOTOR.

(4) EXISTING PUMP CONTROL PANEL LOCATED IN ADMINISTRATION BUILDING CONTROL ROOM.

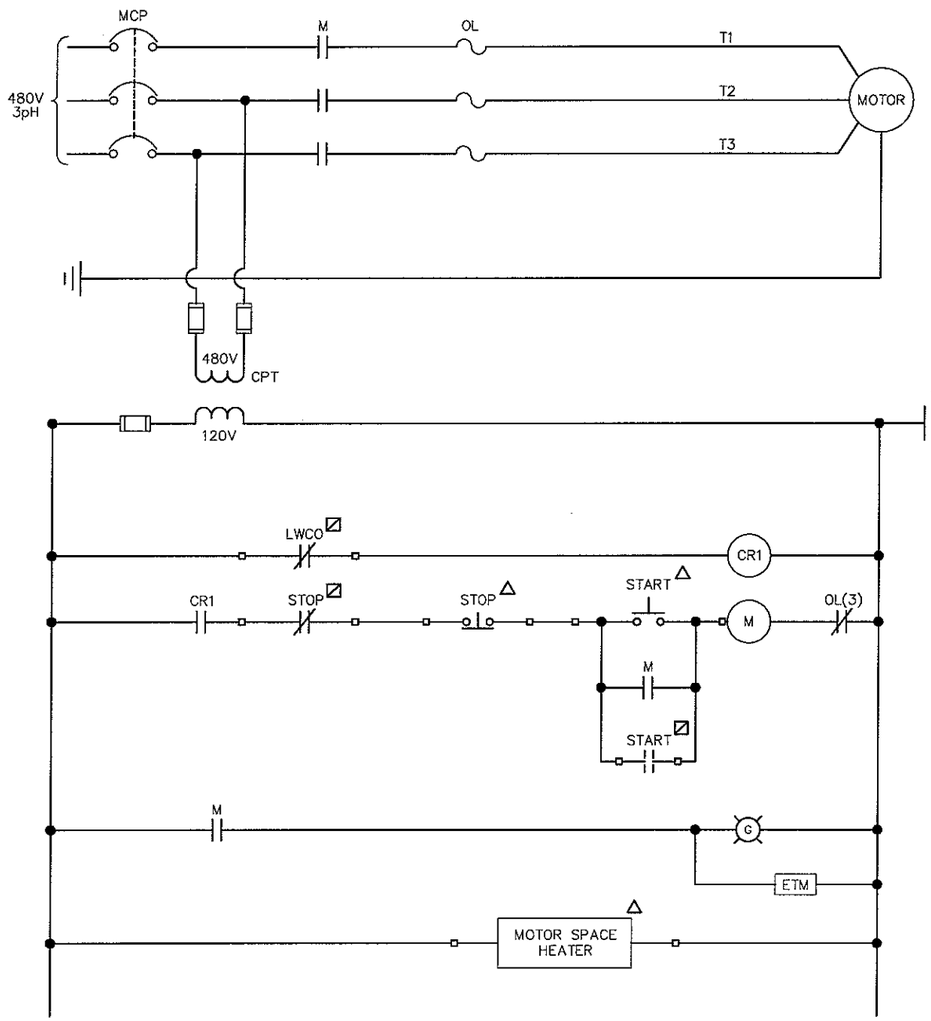

RAW WATER PUMP P-1D

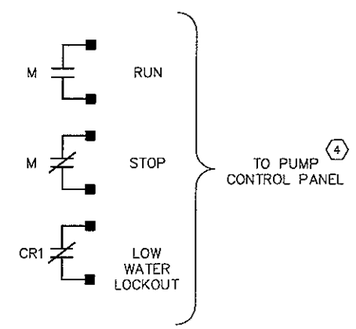

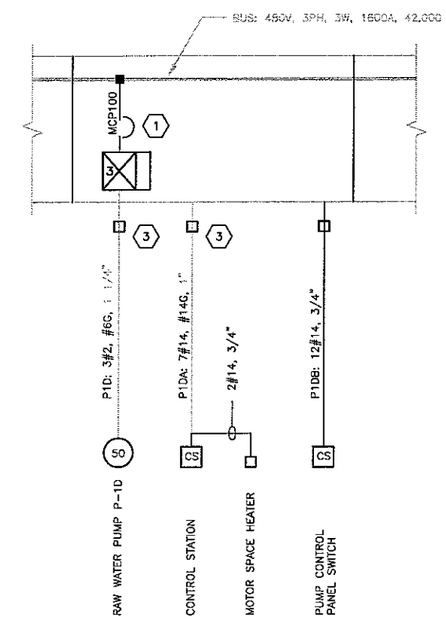

EXISTING MCC PARTIAL ONE-LINE DIAGRAM

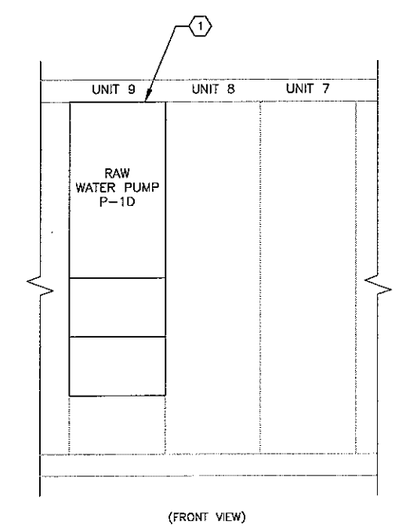

EXISTING MCC PARTIAL ELEVATION

Issue No.	Description	Date	Drwn.	Chkd.	Resp. Engr.	Proj. Mgr.
–	–	–	–	–	–	–
–	–	–	–	–	–	–
–	–	–	–	–	–	–
–	–	–	–	–	–	–
1	REVISED PRIOR TO FINAL BID ISSUE	07/14/04	SWC	DFB	TLG	MCG
0	ISSUED FOR BID	6/02/04	SWC	DFB	TLG	MCG

STATE OF TEXAS — DAVID F. BESINGER 52236 — REGISTERED PROFESSIONAL ENGINEER — 7-14-04

HDR Engineering, Inc.

BAR LENGTH ON ORIGINAL DRAWING EQUALS ONE INCH. ADJUST SCALE ACCORDINGLY.

Project Manager: M. C. GRAVES
Designed: T. L. GLAUM
Designed:
Checked: D. F. BESINGER
Drawn: S. W. CAMPBELL

WATER TREATMENT PLANT EXPANSION 2004

THE CITY OF KERRVILLE, TEXAS

EXISTING MCC ELECTRICAL

EXISTING ELECTRICAL MODIFICATIONS

Date	Project No.	Drawing No.	Issue
JUNE, 2004	08340-025-036	02E-02	1
Scale: NOT TO SCALE	File Name: 02E-02.DWG		

C:\WINDM\001112003 6\DWG\02E-02.DWG, 02E-02, 7/13/2004 11:50:33 AM, scampbel

KEYED NOTES:

1. CONDUIT TO MEMBRANE BUILDING. REFER TO SHEET 01E-01 FOR UNDERGROUND CONDUIT ROUTING.
2. TANK APPEARING IN PHOTO IS TO BE REPLACED WITH NEW TANK.
3. MODIFY TANK TO ACCEPT INDUCTION LEVEL ELECTRODES:
   - GROUND
   - LOW-LEVEL (PUMP START)
   - HIGH LEVEL (PUMP STOP)
4. DAYTANK FILL CONTROL PANEL.

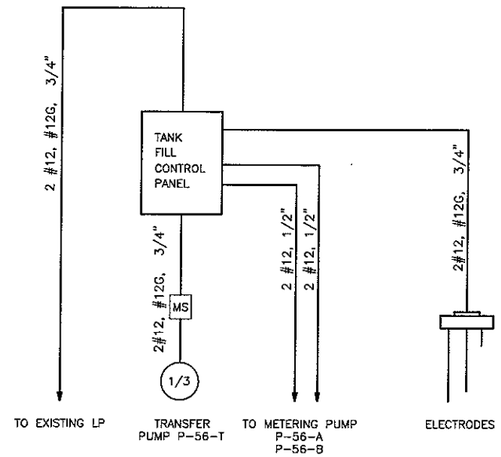

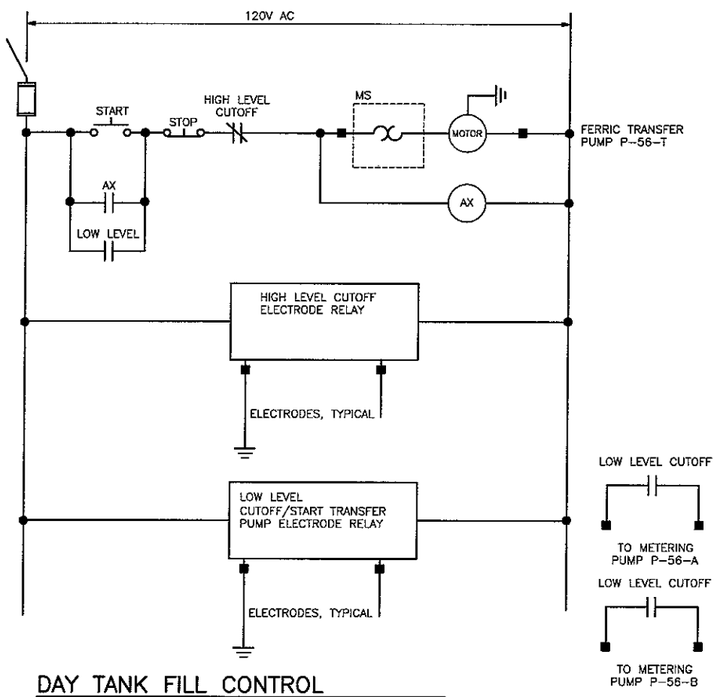

DAY TANK FILL CONTROL PANEL SCHEMATIC AND ONE-LINE

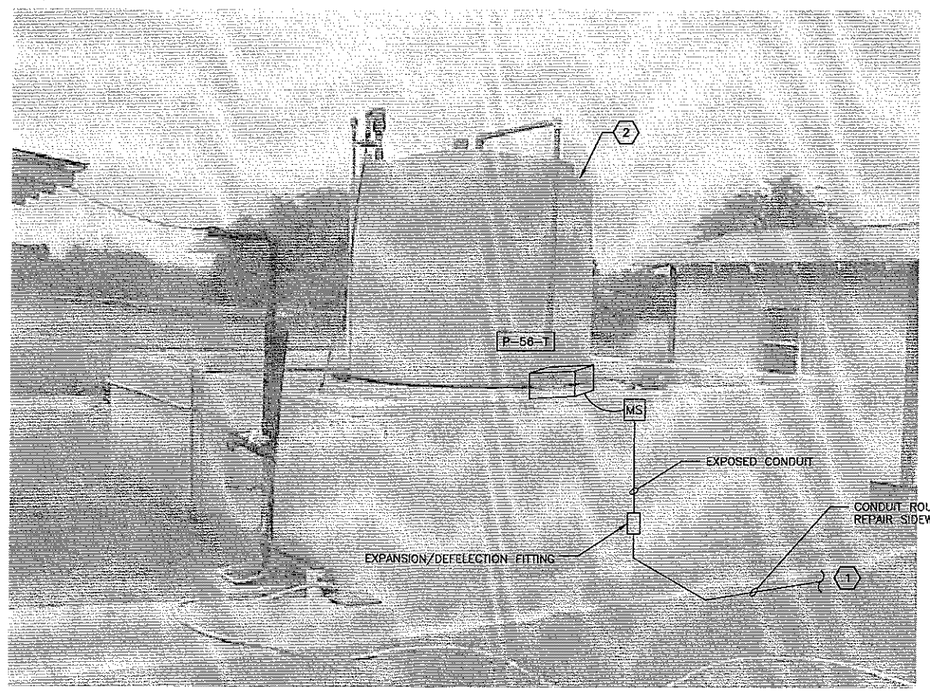

NEW FERRIC SULFATE TRANSFER PUMP INSTALLATION

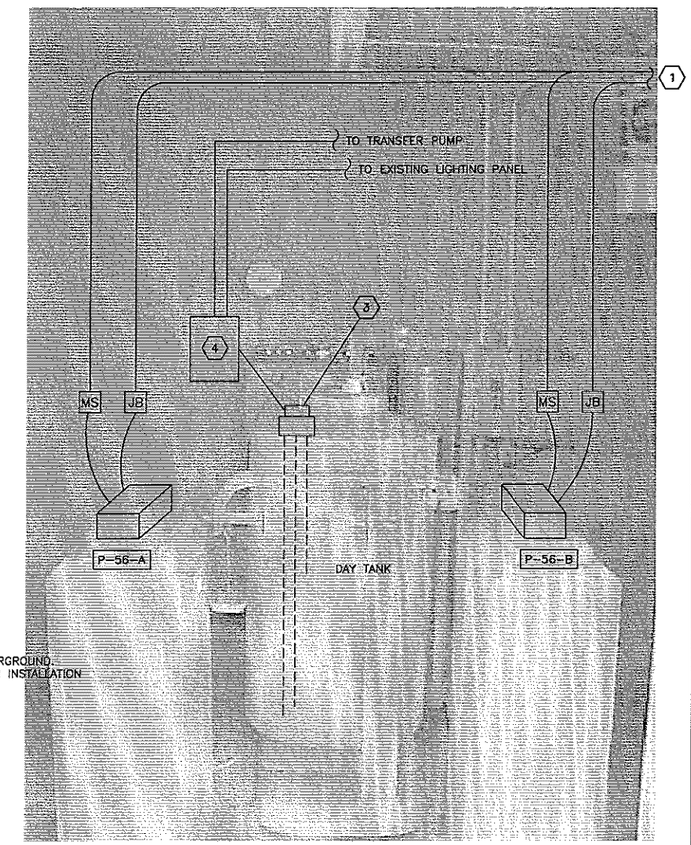

NEW FERRIC SULFATE METERING PUMPS INSTALLATION

Issue No.	Description	Date	Drwn.	Chkd.	Resp. Engr.	Proj. Mgr.
–	–	–	–	–	–	–
–	–	–	–	–	–	–
–	–	–	–	–	–	–
–	–	–	–	–	–	–
1	REVISED PRIOR TO FINAL BID ISSUE	07/14/04	SWC	DFB	TLG	MCG
0	ISSUED FOR BID	6/02/04	SWC	DFB	TLG	MCG

7-14-04
STATE OF TEXAS
DAVID F. BESINGER
52236
REGISTERED PROFESSIONAL ENGINEER

HDR Engineering, Inc.

BAR LENGTH ON ORIGINAL DRAWING EQUALS ONE INCH. ADJUST SCALE ACCORDINGLY.

Project Manager: M. C. GRAVES
Designed: T. L. GLAUM
Designed:
Checked: D. F. BESINGER
Drawn: S. W. CAMPBELL

WATER TREATMENT PLANT EXPANSION 2004
THE CITY OF KERRVILLE, TEXAS

COAGULANT FEED SYSTEM ELECTRICAL

ELECTRICAL PLAN AND DETAILS

Date: JUNE, 2004
Scale: NOT TO SCALE
Project No.: 08340-025-036
File Name: 03E-01.dwg
Drawing No.: 03E-01
Issue: 1

C:\WINDM\0011120036\DWG\03E-01.DWG, 03E-01, 7/13/2004 11:50:50 AM, scampbel

GENERAL NOTES:

A. MOUNT ALL RECEPTACLES IN LOWER LEVEL AT 4'-0" ABOVE FINISHED FLOOR.

KEYED NOTES:

1. DUCTBANK CONTINUES ON SHEET 01E-01.
2. CONDUIT TURNING UP, TO MCC LOCATED IN ELECTRICAL ROOM ON UPPER LEVEL.
3. CONNECT GROUND TO MCC ON UPPER LEVEL.
4. RECEPTACLE FOR SUMP PUMP. INSTALL A WEATHERPROOF "IN-USE" COVER.
5. 3/4" CONCEALED CONDUIT BELOW FLOOR SLAB FOR LOW LEVEL SWITCH WIRING.
6. SUMP PUMPS TO BE PLUGGED INTO RECEPTACLES. TIE-WRAP AND SUPPORT POWER CABLES TO ANCHOR SUPPORT ALONG WALL.
7. THERE SHALL BE NO CONDUIT PENETRATIONS FROM LOWER STORAGE ROOM INTO PUMP EQUIPMENT ROOM. CONDUIT INTO PUMP EQUIPMENT ROOM SHALL BE FROM ABOVE.
8. GROUND CABLE SHALL EXTEND UP TO METAL BUILDING COLUMN AND BONDED TO COLUMN.

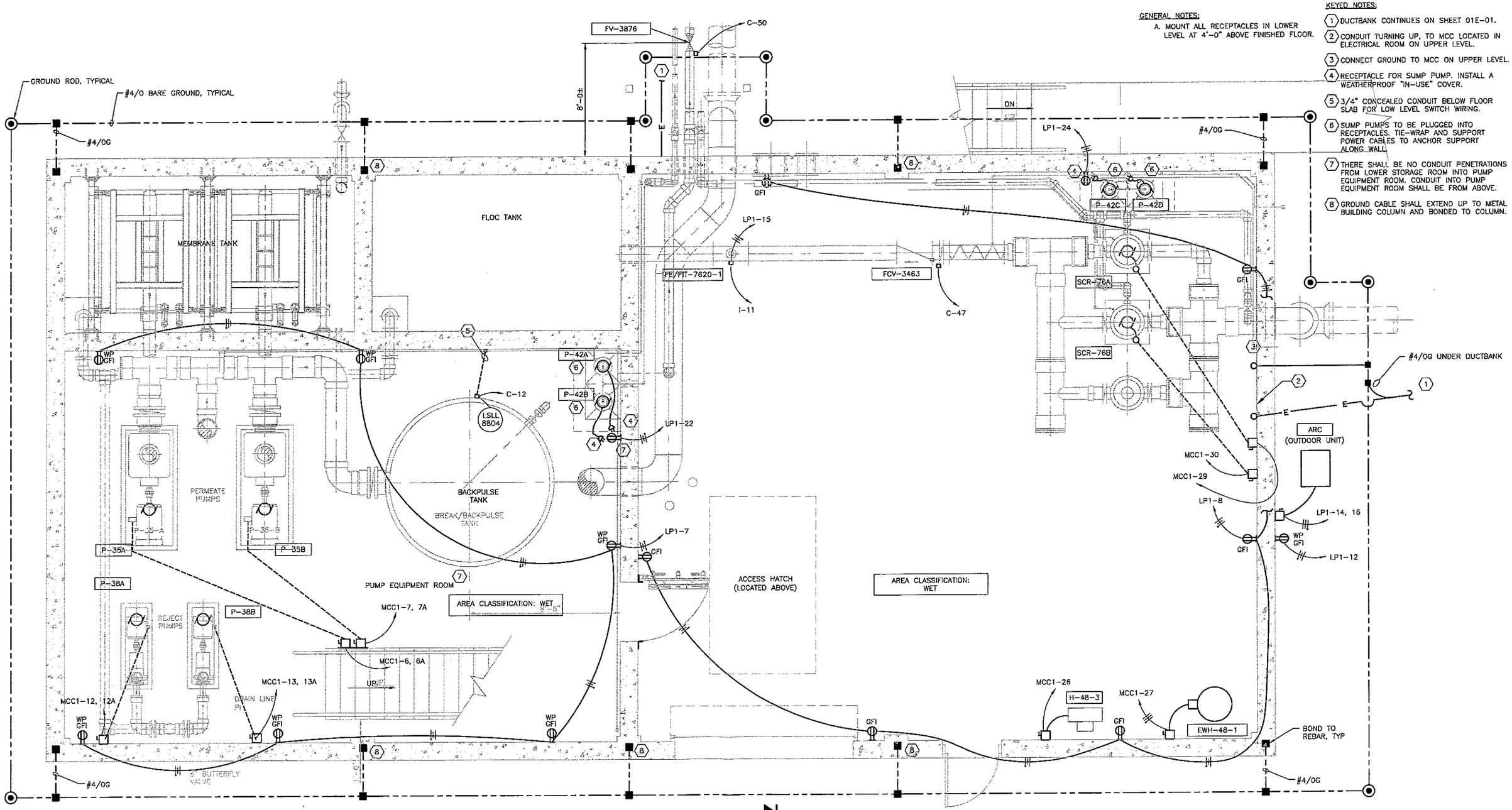

MEMBRANE GROUND LEVEL FLOOR PLAN

N

Issue No.	Description	Date	Drwn.	Chkd.	Resp. Engr.	Proj. Mgr.
–	–	–	–	–	–	–
–	–	–	–	–	–	–
–	–	–	–	–	–	–
–	–	–	–	–	–	–
1	REVISED PRIOR TO FINAL BID ISSUE	07/14/04	SWC	DFB	TLG	MCG
0	ISSUED FOR BID	6/02/04	SWC	DFB	TLG	MCG

David F. Besinger 7-14-04
STATE OF TEXAS
DAVID F. BESINGER
52236
REGISTERED PROFESSIONAL ENGINEER

HDR Engineering, Inc.

BAR LENGTH ON ORIGINAL DRAWING EQUALS ONE INCH. ADJUST SCALE ACCORDINGLY.

Project Manager: M. C. GRAVES
Designed: T. L. GLAUM
Designed:
Checked: D. F. BESINGER
Drawn: S. W. CAMPBELL

WATER TREATMENT PLANT EXPANSION 2004

THE CITY OF KERRVILLE, TEXAS

MEMBRANE SYSTEM ELECTRICAL

GROUND LEVEL POWER PLAN

Date	Project No.	Drawing No.	Issue
JUNE, 2004	08340-025-036	04E-01	1
Scale: 3/8"=1'-0"	File Name: 04E-01.DWG		

C:\WINDM\0011120036\DWG\04E-01.DWG, 04E-01, 7/13/2004 11:51:09 AM, scampbel

KEYED NOTES:

1. PENDANT MOUNT LIGHT BELOW LANDING ON STAIRWAY, 8' MOUNTING HEIGHT.
2. CIRCUIT TO LIGHT SWITCH AT TOP OF STAIRS. REFER TO SHEET 04E-04 FOR CIRCUIT CONTINUATION.
3. THERE SHALL BE NO CONDUIT PENETRATIONS FROM LOWER STORAGE ROOM INTO PUMP EQUIPMENT ROOM. CONDUIT INTO PUMP EQUIPMENT ROOM SHALL BE FROM ABOVE.
4. INSTALL LIGHT, CONDUIT AND WIRING SUCH THAT LIGHT CAN BE REMOVED WITH MINIMUM AMOUNT OF RE-WIRING WHEN THE WALL IS REMOVED DURING FUTURE EXPANSION.

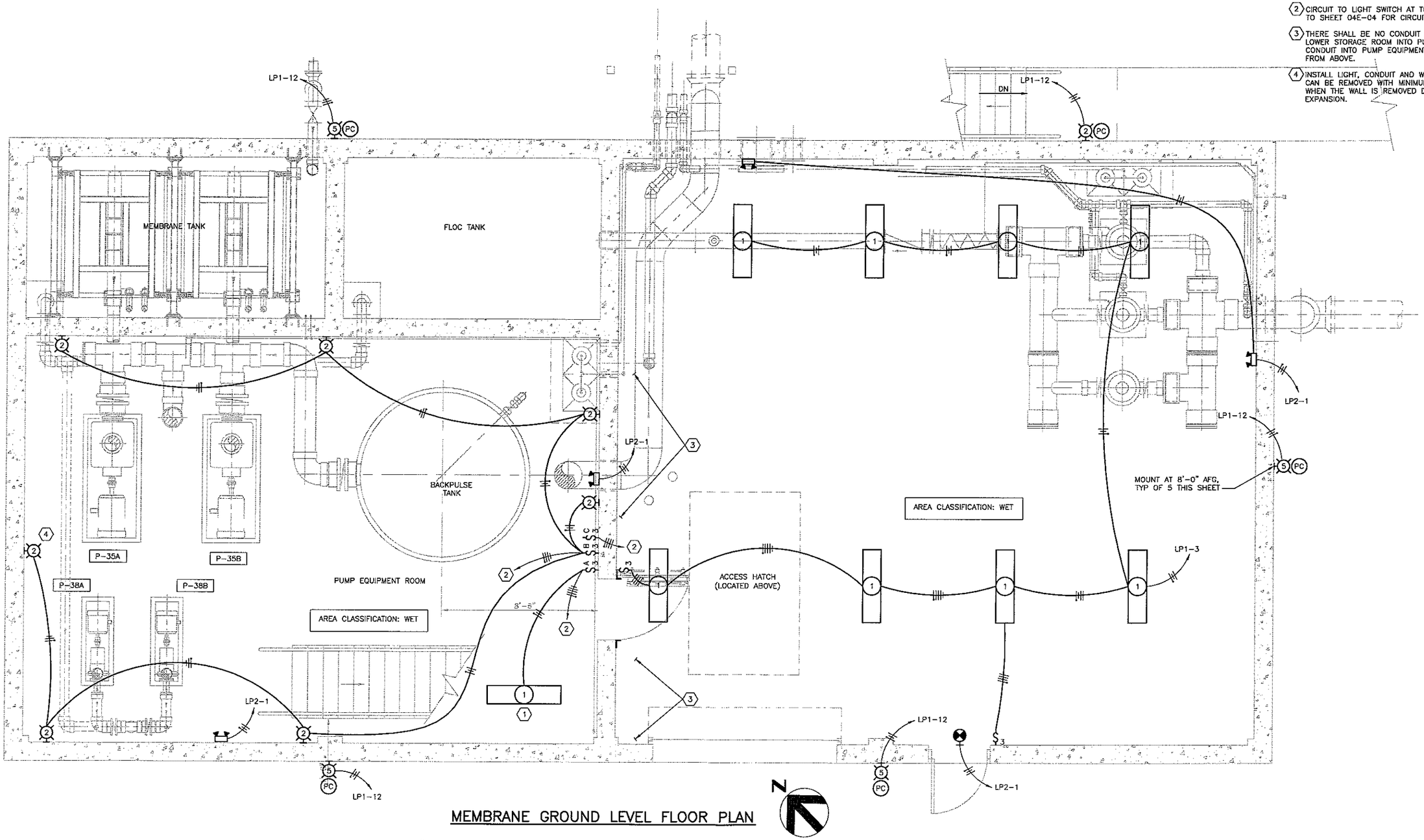

MEMBRANE GROUND LEVEL FLOOR PLAN

Issue No.	Description	Date	Drwn.	Chkd.	Resp. Engr.	Proj. Mgr.
–	–	–	–	–	–	–
–	–	–	–	–	–	–
–	–	–	–	–	–	–
–	–	–	–	–	–	–
1	REVISED PRIOR TO FINAL BID ISSUE	07/14/04	SWC	DFB	TLG	MCG
0	ISSUED FOR BID	6/02/04	SWC	DFB	TLG	MCG

David F. Besinger 7-14-04
STATE OF TEXAS
DAVID F. BESINGER
52236
REGISTERED PROFESSIONAL ENGINEER

HDR Engineering, Inc.

BAR LENGTH ON ORIGINAL DRAWING EQUALS ONE INCH. ADJUST SCALE ACCORDINGLY.

Project Manager: M. C. GRAVES
Designed: T. L. GLAUM
Designed:
Checked: D. F. BESINGER
Drawn: S. W. CAMPBELL

WATER TREATMENT PLANT EXPANSION 2004

THE CITY OF KERRVILLE, TEXAS

MEMBRANE SYSTEM ELECTRICAL

GROUND LEVEL LIGHTING PLAN

Date: JUNE, 2004
Scale: 3/8"=1'-0"
Project No.: 08340-025-036
File Name: 04E-02.DWG
Drawing No.: 04E-02
Issue: 1

C:\WINDM\0011120036\DWG\04E-02.DWG, 04E-02, 7/13/2004 11:51:23 AM, scampbel

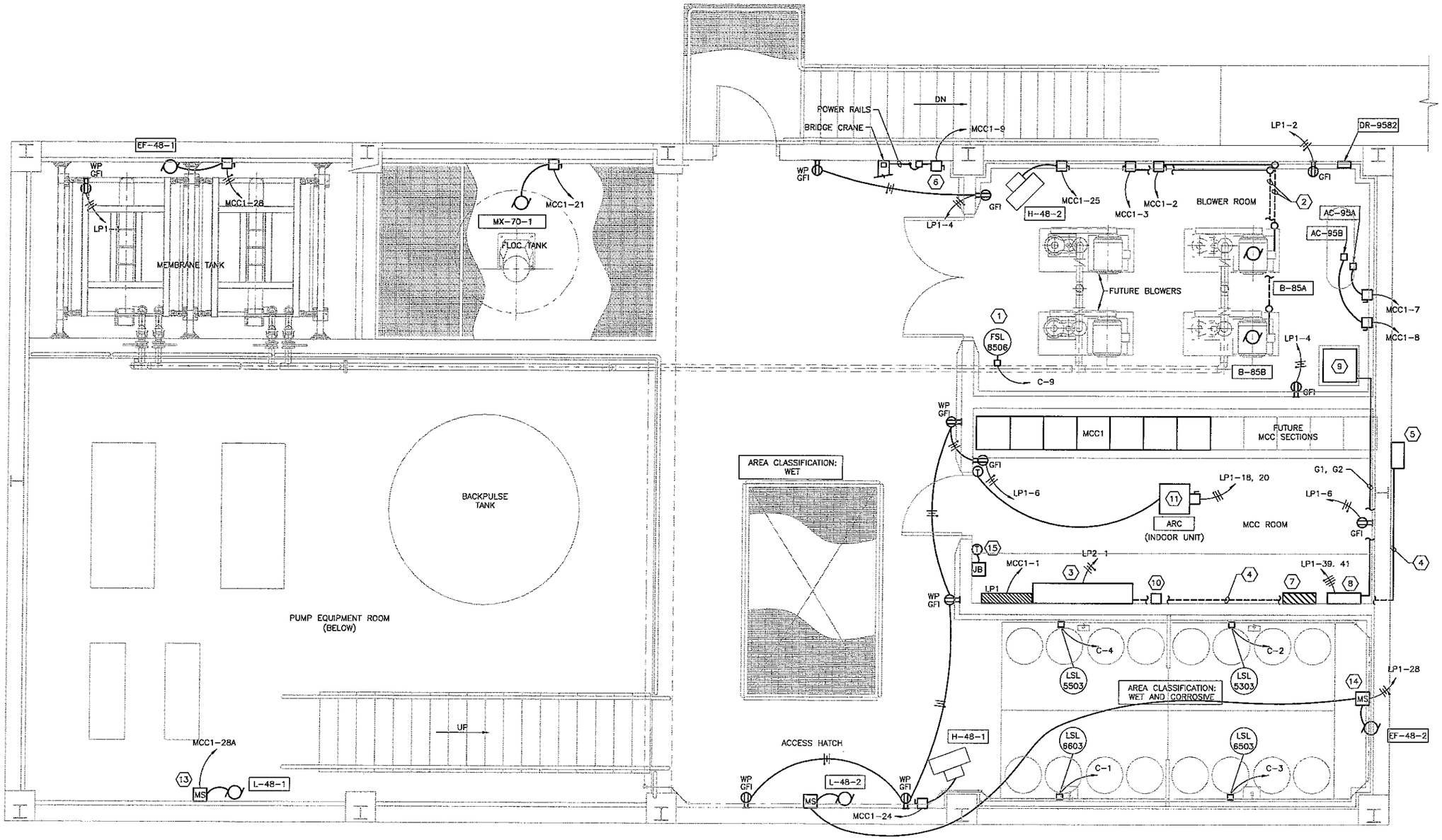

MEMBRANE UPPER LEVEL FLOOR PLAN

GENERAL NOTES:

A. ALIGN PENETRATIONS IN THE FLOOR IN A NOTRTH/SOUTH ALIGNMENT TO MINIMIZE THE NUMBER OF FLOOR SECTIONS THAT ARE PENETRATED.

KEYED NOTES:

1. MOUNT ON AIR PIPING BELOW FLOOR.
2. CONDUIT TO BE ROUTED BELOW BLOWER ROOM FLOOR.
3. INSTALL ZENON CONTROL PANEL.
4. INSTALL SPARE 1" CONDUIT FOR FUTURE FIBER-OPTIC CABLE, AND INSTALL THE TELEPHONE LINE IN CONDUIT BELOW FLOOR SLAB.
5. NEMA 4X SST PULL BOX FOR FIBER-OPTIC CABLE AND TELEPHONE LINE.
6. INSTALL DISCONNECT SWITCH AT 4'-0" ABOVE FINISHED FLOOR. INSTALL CIRCUIT IN CONDUIT UP TO A JUNCTION BOX NEAR THE POWER RAILS. CONNECT CIRCUIT TO POWER RAILS AS REQUIRED.
7. LIGHTING PANEL LP2 FOR EMERGENCY EQUIPMENT.
8. AUTOMATIC TRANSFER SWITCH. REFER TO ONE-LINE DIAGRAM FOR CIRCUIT REQUIREMENTS.
9. EMERGENCY GENERATOR.
10. INSTALL A 12"x12" JUNCTION BOX FOR FUTURE FIBER-OPTIC CABLE. CONNECT JUNCTION BOX TO THE EMPTY CONDUIT FOR FUTURE FIBER-OPTIC CABLE, FOR OWNERS FUTURE USE.
11. AIR CONDITIONER LOCATED ABOVE MCC ROOM CEILING.
12. PROVIDE 1/2" CONDUIT FOR THERMOSTAT WIRING. THERMOSTAT AND WIRING TO BE PROVIDED BY HVAC EQUIPMENT MANUFACTURER.
13. MOUNT AT 4'-0" ABOVE FINISHED FLOOR LEVEL OF LOWER FLOOR. INSTALL CONDUIT UP TO LOUVER.
14. WIRE MANUAL STARTER SUCH THAT LOUVER L-48-1 OPENS WHEN MANUAL STARTER IS TURNED ON.
15. INSTALL TEMPERATURE ALARM AT 9'-0" ABOVE FINISHED FLOOR. INSTALL 1/2" CONDUIT DOWN TO JUNCTION BOX MOUNTED 4'-0" ABOVE FINISHED FINISHED FLOOR. INSTALL 2#14 WIRES, COILED INSIDE JUNCTION BOX FOR FUTURE USE. COVER JUNCTION BOX WITH A BLANK COVER PLATE.

Issue No.	Description	Date	Drwn.	Chkd.	Resp. Engr.	Proj. Mgr.
–	–	–	–	–	–	–
–	–	–	–	–	–	–
–	–	–	–	–	–	–
–	–	–	–	–	–	–
1	REVISED PRIOR TO FINAL BID ISSUE	07/14/04	SWC	DFB	TLG	MCG
0	ISSUED FOR BID	6/02/04	SWC	DFB	TLG	MCG

STATE OF TEXAS — DAVID F. BESINGER — 52236 — REGISTERED PROFESSIONAL ENGINEER — 7-14-04

HDR Engineering, Inc.

BAR LENGTH ON ORIGINAL DRAWING EQUALS ONE INCH. ADJUST SCALE ACCORDINGLY.

Project Manager: M. C. GRAVES
Designed: T. L. GLAUM
Designed:
Checked: D. F. BESINGER
Drawn: S. W. CAMPBELL

WATER TREATMENT PLANT EXPANSION 2004

THE CITY OF KERRVILLE, TEXAS

MEMBRANE SYSTEM ELECTRICAL

UPPER LEVEL POWER PLAN

Date	Project No.	Drawing No.	Issue
JUNE, 2004	08340-025-036	04E-03	1
Scale: 3/8"=1'-0"	File Name: 04E-03.dwg		

C:\WINDM\0011120036\DWG\04E-03.DWG, 04E-03, 7/13/2004 11:51:37 AM, scampbel

KEYED NOTES:

1. WALL MOUNT LIGHT 8'-0" ABOVE FINISHED LEVEL OF THE STAIRWAY LANDING.
2. CIRCUIT TO LIGHT SWITCH BELOW STAIRS. REFER TO SHEET 04E-02 FOR CIRCUIT CONTINUATION.
3. MOUNT LIGHT ABOVE DOOR, 8' ABOVE STAIRWAY LANDING.

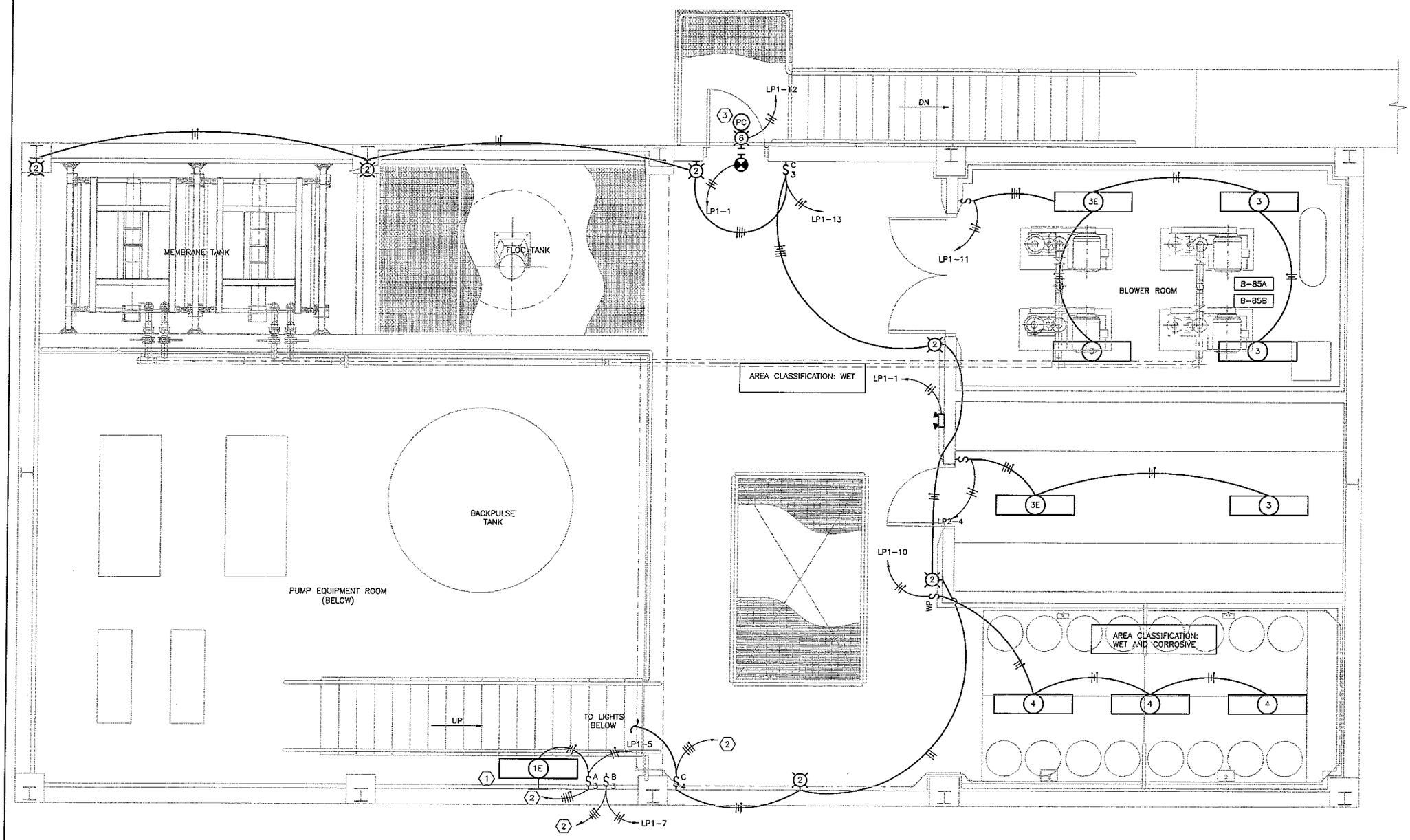

MEMBRANE UPPER LEVEL FLOOR PLAN

N

Issue No.	Description	Date	Drwn.	Chkd.	Resp. Engr.	Proj. Mgr.
–	–	–	–	–	–	–
–	–	–	–	–	–	–
–	–	–	–	–	–	–
–	–	–	–	–	–	–
1	REVISED PRIOR TO FINAL BID ISSUE	07/14/04	SWC	DFB	TLG	MCG
0	ISSUED FOR BID	6/02/04	SWC	DFB	TLG	MCG

David F. Besinger 7-14-04
STATE OF TEXAS
DAVID F. BESINGER
52236
REGISTERED PROFESSIONAL ENGINEER

HDR
HDR Engineering, Inc.

BAR LENGTH ON ORIGINAL DRAWING EQUALS ONE INCH. ADJUST SCALE ACCORDINGLY.

Project Manager: M. C. GRAVES
Designed: T. L. GLAUM
Designed:
Checked: D. F. BESINGER
Drawn: S. W. CAMPBELL

WATER TREATMENT PLANT EXPANSION 2004
THE CITY OF KERRVILLE, TEXAS

MEMBRANE SYSTEM ELECTRICAL

UPPER LEVEL LIGHTING PLAN

Date	Project No.	Drawing No.	Issue
JUNE, 2004	08340-025-036	04E-04	1
Scale: 3/8"=1'-0"	File Name: 04E-04.DWG		

C:\WINDM\0011120036\DWG\04E-04.DWG, 04E-04, 7/13/2004 11:51:50 AM, scampbel

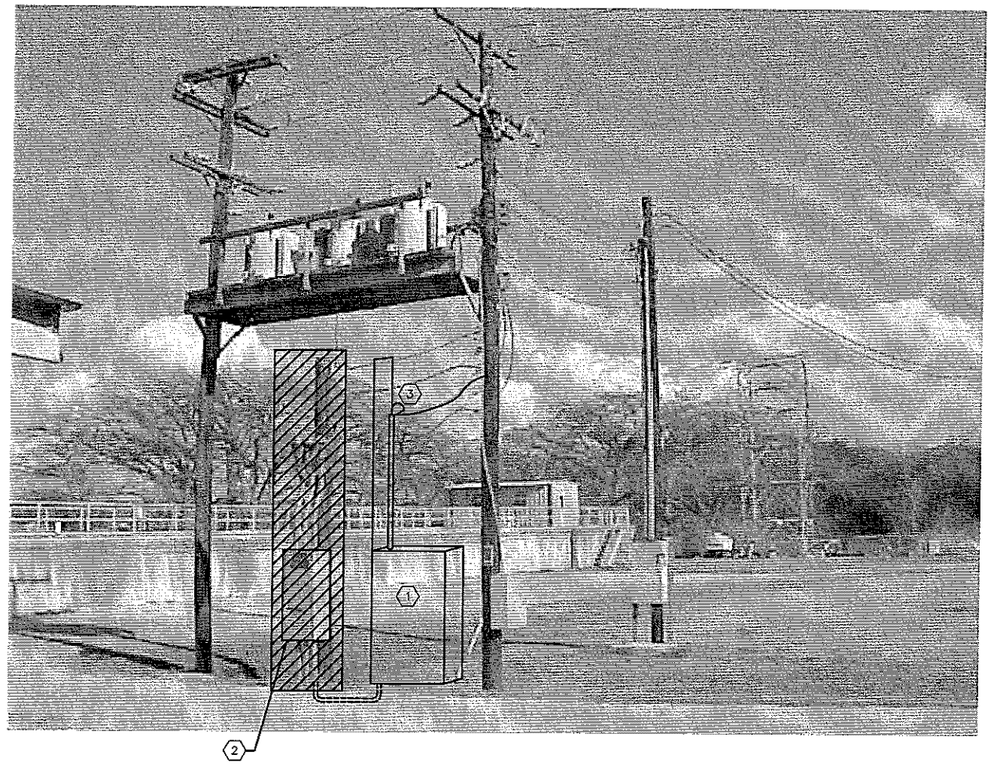

PLANT POWER DEMOLITION DETAIL

NOT TO SCALE

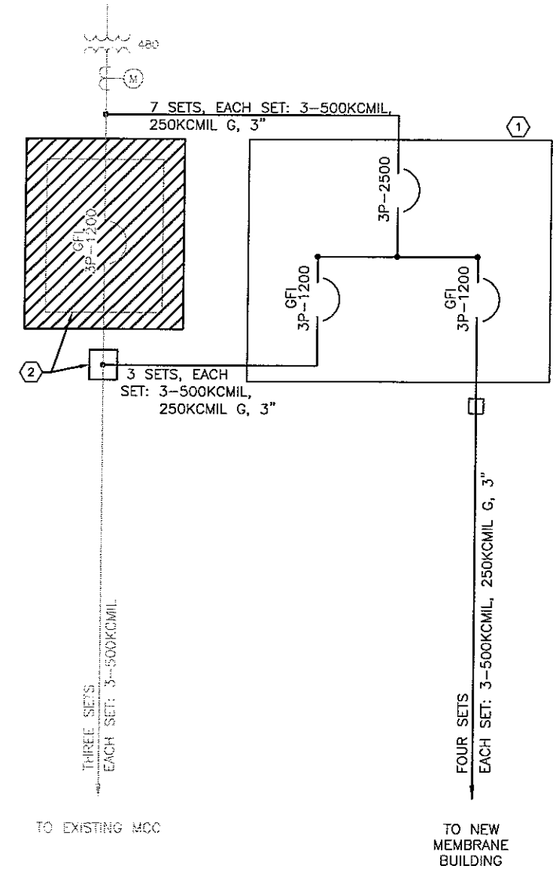

PLANT POWER ONE-LINE DIAGRAM

NOT TO SCALE

KEYED NOTES:

1. INSTALL NEW SWITCHBOARD. SET SWITCHBOARD ON NEW EQUIPMENT BASE. BASE SHALL BE 12" AFG.
2. REMOVE EXISTING DISCONNECT. REPLACE WITH A TERMINAL BOX, RE-FEED EXISTING CONDUCTORS FROM NEW SWITCHBOARD. SPLICE CONDUCTORS AS REQUIRED.
3. INSTALL NEW RISER POLE WITH CONDUITS AND WEATHERHEADS. SUPPORT AS REQUIRED.

Issue No.	Description	Date	Drwn.	Chkd.	Resp. Engr.	Proj. Mgr.
–	–	–	–	–	–	–
–	–	–	–	–	–	–
–	–	–	–	–	–	–
–	–	–	–	–	–	–
1	REVISED PRIOR TO FINAL BID ISSUE	07/14/04	SWC	DFB	TLG	MCG
0	ISSUED FOR BID	5/02/04	SWC	DFB	TLG	MCG

David F. Besinger 7-14-04
STATE OF TEXAS
DAVID F. BESINGER
52236
REGISTERED PROFESSIONAL ENGINEER

HDR Engineering, Inc.

BAR LENGTH ON ORIGINAL DRAWING EQUALS ONE INCH. ADJUST SCALE ACCORDINGLY.

Project Manager: M. C. GRAVES
Designed: T. L. GLAUM
Designed:
Checked: D. F. BESINGER
Drawn: S. W. CAMPBELL

WATER TREATMENT PLANT EXPANSION 2004

THE CITY OF KERRVILLE, TEXAS

ELECTRICAL & INSTRUMENTATION ELECTRICAL

PLANT POWER ONE-LINE DIAGRAM MODIFICATIONS

Date	Project No.	Drawing No.	Issue
JUNE, 2004	08340-025-036	06E-01	1
Scale: AS NOTED	File Name: 06E-01.dwg		

C:\WINDM\001111200360\DWG\06E-01.DWG, 06E-01, 7/13/2004 11:52:02 AM, scampbel

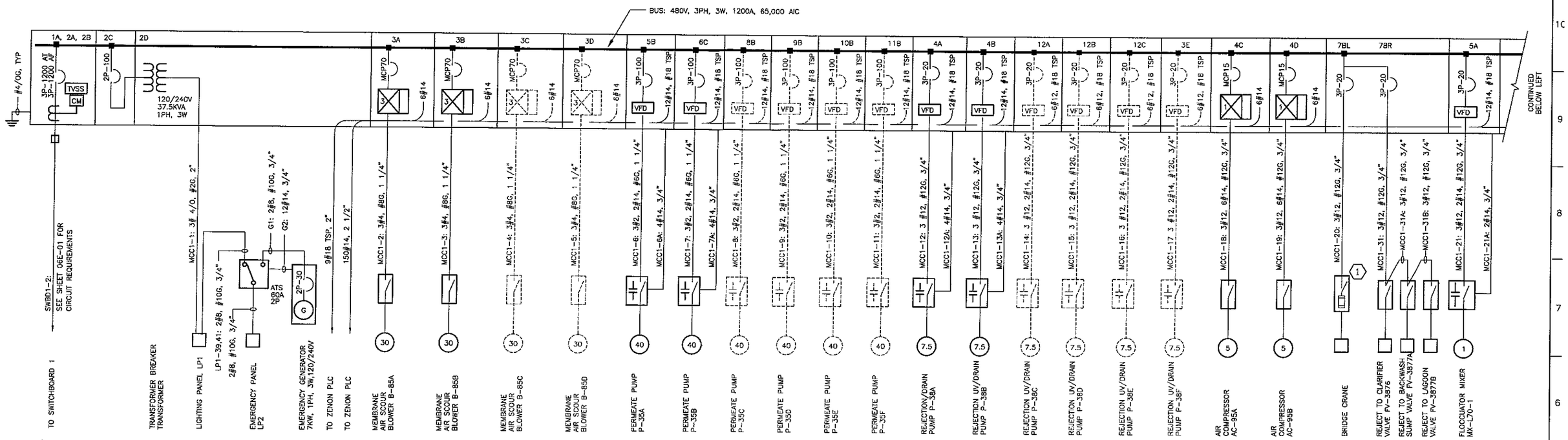

MOTOR CONTROL CENTER MCC1 ONE-LINE

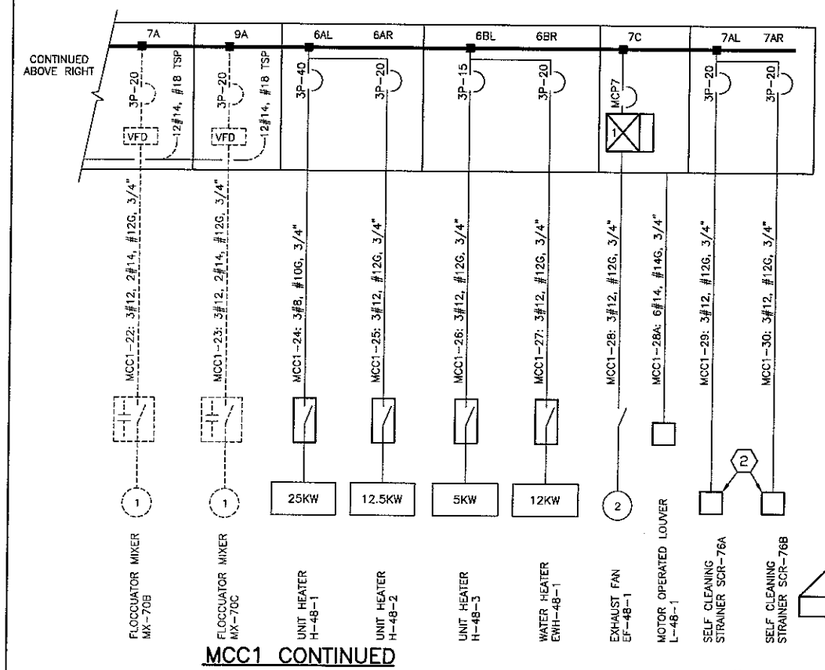

MCC1 CONTINUED

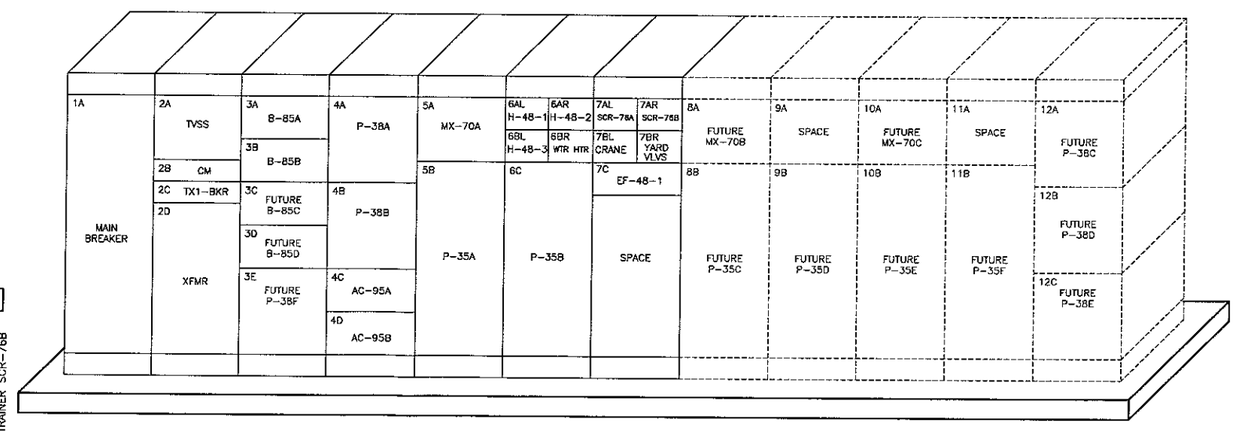

MCC1 ELEVATION

KEYED NOTES:

1. DISCONNECT SWITCH FURNISHED AS PART OF EQUIPMENT PACKAGE.
2. STRAINER CONTROL PANEL. WIRE STRAINER VALVES, CONTROLS, ETC. PER MANUFACTURER'S SHOP DRAWINGS.

MCC1 LOAD CALCULATIONS

	HP or kVA	FULL LOAD AMPS@480V
B-85A	30	40
B-85B	30	40
B-85C	30	40
B-85D*	30	40
P-35A	40	52
P-35B	40	52
P-35C	40	52
P-35D	40	52
P-35E	40	52
P-35F	40	52
P-38A	7.5	11
P-38B	7.5	11
P-38C	7.5	11
P-38D	7.5	11
P-38E	7.5	11
P-38F	7.5	11
MX-70A	1	2.1
MX-70B	1	2.1
MX-70C	1	2.1
AC-95A	5	7.6
AC-95B	5	7.6
LP1**	45	54
BRIDGE CRANE	10	14
H-48-1	25	30
H-48-2	12.5	15
H-48-3	5	4.6
EWH-48-1	12	15
EF-48-1	2	3.4
SCR-78A	0.25	0.5
SCR-78B	0.25	0.5
YARD VALVES	1.5	3.3
SUBTOTAL LOAD	531.50	699.8
25 % LARGEST LOAD		13.5
TOTAL LOAD – AMPS		713.3

* – LOAD IS CONSIDERED STANDBY AND IS NOT INCLUDED IN LOAD CALCULATIONS.

** – SINGLE-PHASE LOAD.

Issue No.	Description	Date	Drwn.	Chkd.	Resp. Engr.	Proj. Mgr.
–	–	–	–	–	–	–
–	–	–	–	–	–	–
–	–	–	–	–	–	–
–	–	–	–	–	–	–
1	REVISED PRIOR TO FINAL BID ISSUE	07/14/04	SWC	DFB	TLG	MCG
0	ISSUED FOR BID	6/02/04	SWC	DFB	TLG	MCG

STATE OF TEXAS — DAVID F. BESINGER — 52236 — REGISTERED PROFESSIONAL ENGINEER — 7-14-04

HDR Engineering, Inc.

BAR LENGTH ON ORIGINAL DRAWING EQUALS ONE INCH. ADJUST SCALE ACCORDINGLY.

Project Manager: M. C. GRAVES
Designed: T. L. GLAUM
Designed:
Checked: D. F. BESINGER
Drawn: S. W. CAMPBELL

WATER TREATMENT PLANT EXPANSION 2004

THE CITY OF KERRVILLE, TEXAS

ELECTRICAL & INSTRUMENTATION ELECTRICAL

MCC1 ONE-LINE DIAGRAMS AND ELEVATIONS

Date	Project No.	Drawing No.	Issue
JUNE, 2004	08340-025-038	06E-02	1
Scale: NOT TO SCALE	File Name: 06E-02.dwg		

C:\WINDM\0011120036\DWG\06E-02.DWG, 06E-02, 7/13/2004 11:52:09 AM, scampbel

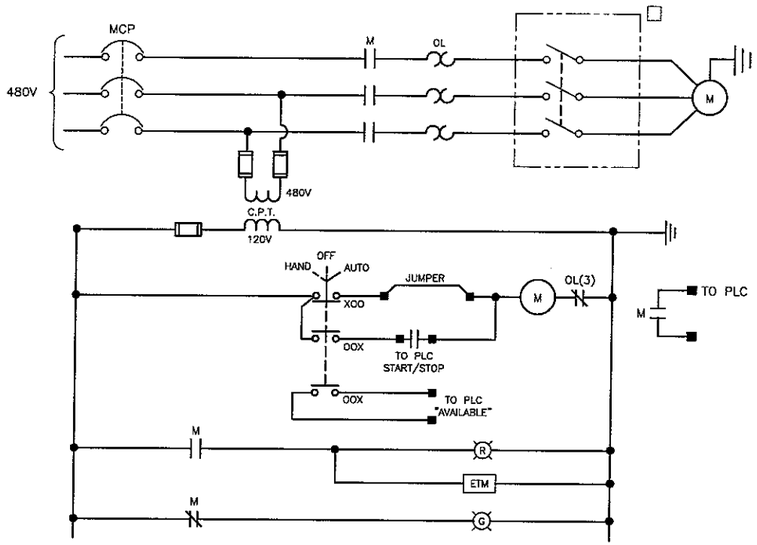

BLOWER SCHEMATIC B-85A & B-85B

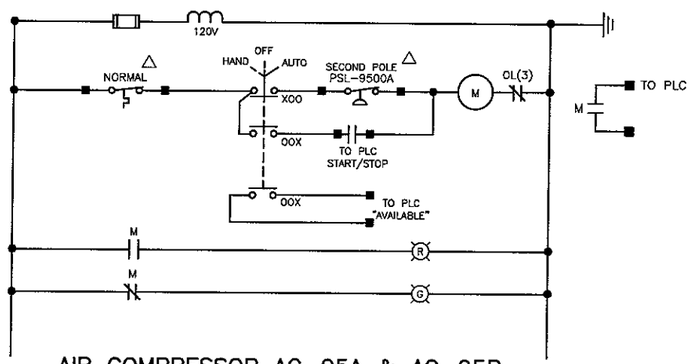

AIR COMPRESSOR AC-95A & AC-95B

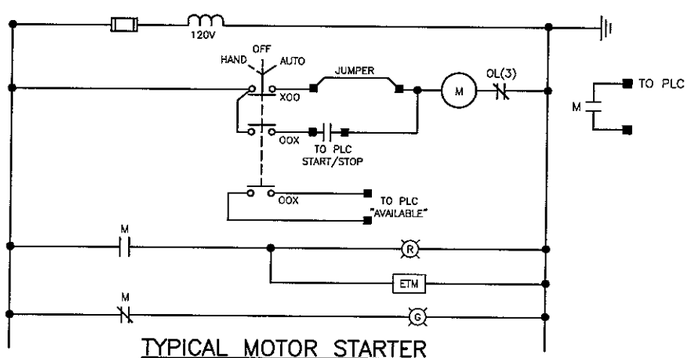

TYPICAL MOTOR STARTER

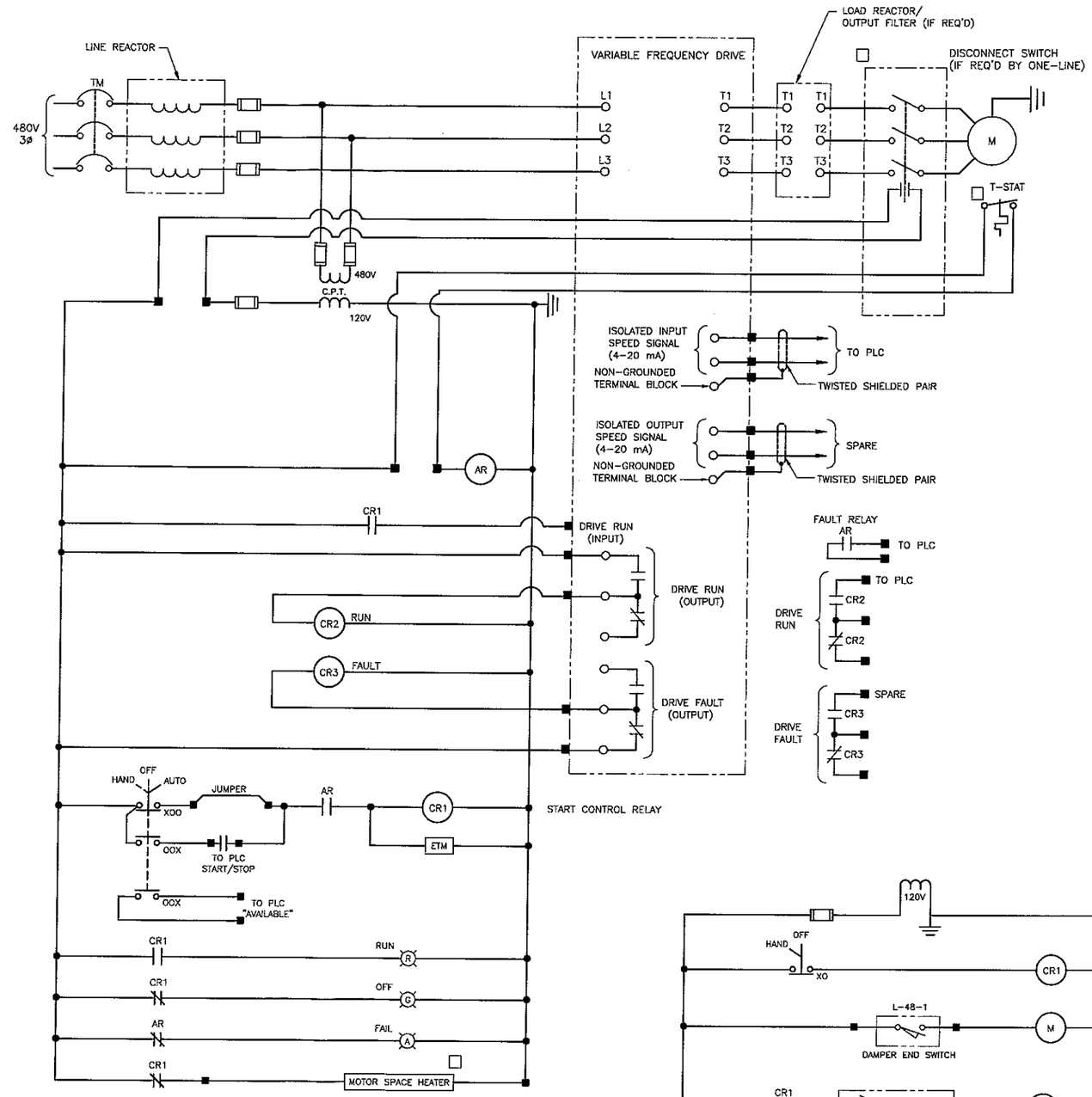

TYPICAL VFD SCHEMATIC

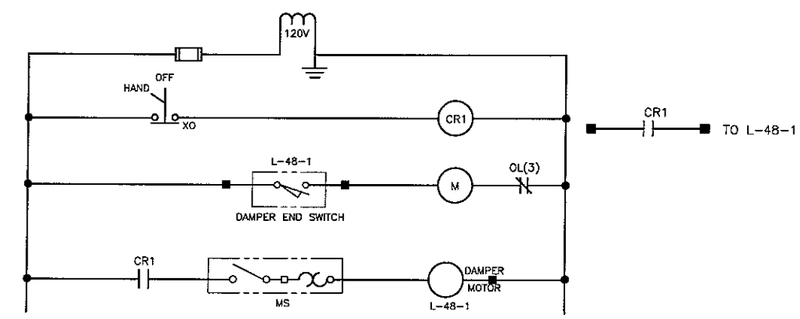

EXHAUST FAN EF-48-1 CONTROL SCHEMATIC

DEVICE LOCATION LEGEND

△ LOCATED AT OR NEAR COMPRESSOR

□ LOCATED AT OR NEAR MOTOR

Issue No.	Description	Date	Drwn.	Chkd.	Resp. Engr.	Proj. Mgr.
–	–	–	–	–	–	–
–	–	–	–	–	–	–
–	–	–	–	–	–	–
–	–	–	–	–	–	–
1	REVISED PRIOR TO FINAL BID ISSUE	07/14/04	SWC	DFB	TLG	MCG
0	ISSUED FOR BID	6/02/04	SWC	DFB	TLG	MCG

David F. Besinger 7-14-04
STATE OF TEXAS
DAVID F. BESINGER
52236
REGISTERED PROFESSIONAL ENGINEER

HDR
HDR Engineering, Inc.

BAR LENGTH ON ORIGINAL DRAWING EQUALS ONE INCH. ADJUST SCALE ACCORDINGLY.

Project Manager: M. C. GRAVES
Designed: T. L. GLAUM
Designed:
Checked: D. F. BESINGER
Drawn: S. W. CAMPBELL

WATER TREATMENT PLANT EXPANSION 2004

THE CITY OF KERRVILLE, TEXAS

ELECTRICAL & INSTRUMENTATION ELECTRICAL

CONTROL SCHEMATICS

Date	Project No.	Drawing No.	Issue
JUNE, 2004	08340-025-036	06E-03	1
Scale: NOT TO SCALE	File Name: 06E-03.dwg		

C:\WINDM\00111120036\DWG\06E-03.DWG, 06E-03, 7/13/2004 11:52:20 AM, scampbel

LIGHTING FIXTURE SCHEDULE

SYMBOL	LAMP	MOUNTING HEIGHT	DESCRIPTION	MFR/MODEL NO.	MFR/MODEL NO.	STYLE
	6 WATT HALOGEN	WALL 7'-0" AFF	COMBINATION EMERGENCY LED EXIT/UNIT; FIBERGLASS REINFORCED POLYESTER HOUSING WITH SST HARDWARE; 120 VAC INPUT; SEALED, MAINTENANCE FREE LEAD-CALCIUM BATTERY; PROVIDE TIME DELAY ON SHUTOFF REQUIRED. TWO HEADS; WITH SELF-DIAGNOSTICS	LITHONIA/ LHZ S 1 R 120 SD, TD1	OR EQUAL	EXIT
	8 WATT INCAND.	WALL 7'-0" AFF	EMERGENCY LIGHT; FIBERGLASS REINFORCED POLYESTER HOUSING WITH SST HARDWARE; 120 VAC INPUT; SEALED, MAINTENANCE FREE LEAD-CALCIUM BATTERY; PROVIDE TIME DELAY ON SHUTOFF REQUIRED. TWO HEADS; WITH SELF-DIAGNOSTICS	LITHONIA/ Z650 SD, TD1	OR EQUAL	
(1E)	F32T8-CW	CEILING SURFACE/ AS NOTED	2-LAMP 120V, ENCLOSED AND GASKETED INDUSTRIAL FLUORESCENT, 4 FOOT LENGTH, RAPID START ELECTRONIC BALLAST, SUITABLE FOR USE IN A WET LOCATION.	LITHONIA/ DMW-2-32-AR-120-GEB	OR EQUAL	
(2)	250W CLEAR METAL HALIDE	WALL/9' ABOVE GRADE OR AS NOTED	WALLPACK, DIE-CAST ALUMINUM HOUSING, BRUSHED ALUMINUM, 120V, SUITABLE FOR USE IN WET LOCATIONS	LITHONIA TWP250M-120	OR EQUAL	
(3E)	F32T8-CW	LAY IN CEILING	120V, STATIC TROFFER, 3 LAMP ELECTRONIC BALLAST. LAY IN CEILING 'E' DENOTES PROVIDE EMERGENCY BALLAST.	LITHONIA/ 2SP-G-332-FW-A12 -120-GEB10	OR EQUAL	
(4)	F32T8-CW	PENDANT 10'-0" AFF	3-LAMP 120V, VAPORITE FLUORESCENT, FIBERGLASS HOUSING, WATERPROOF AND CHEMICAL RESISTANT, RAPID START, ELECTRONIC ENERGY SAVING BALLAST. "E" DENOTES PROVIDE EMERGENCY BATTERY	METALUX/VT-332DR	OR EQUAL	
(5)	100W CLEAR HPS	WALL/9' ABOVE GRADE OR AS NOTED	WALLPACK, DIE-CAST ALUMINUM HOUSING, BRUSHED ALUMINUM, 120V, SUITABLE FOR USE IN WET LOCATIONS, PROVIDE PHOTO-CELL CONTROL	LITHONIA TWP-100HPS-120	OR EQUAL	

NOTES FOR LIGHTING FIXTURES

1. LIGHTING FIXTURE DENOTED BY "PC" SHALL BE OPERATED BY A PHOTO-CELL
2. LIGHTING FIXTURE DENOTED BY "E" SHALL HAVE AN EMERGENCY BATTERY PACK UNSWITCHED ON CIRCUIT.

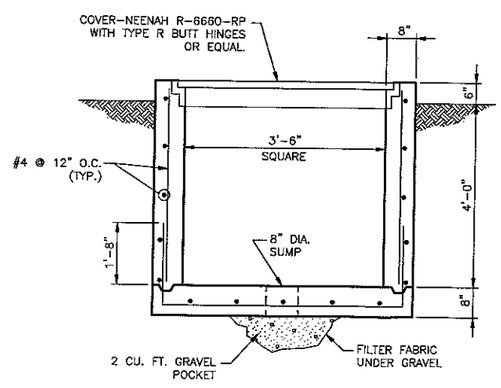

CAST-IN-PLACE ELECTRICAL HANDHOLE
(NOT TO SCALE)

PANEL DESIGNATION: LP2
VOLTAGE: 120/240V, 1PH, 3W
AMPERES: 60

LOCATION: ELECTRICAL ROOM
MAIN: 2P-30
PANEL MOUNTING: WALL

LOAD SERVED	CONNECTED LOAD (KVA) L1	CONNECTED LOAD (KVA) L2	CIRCUIT BREAKER AMPS	CIRCUIT BREAKER POLES	CKT NO.	CKT NO.	CIRCUIT BREAKER POLES	CIRCUIT BREAKER AMPS	CONNECTED LOAD (KVA) L1	CONNECTED LOAD (KVA) L2	LOAD SERVED
EMERGENCY LIGHTS	0.5		20	1	1	2	1	20	1.8		ZENON PANEL
RAW WATER FLOWMETERS		0.2	20	1	3	4	1	20		0.3	ELEC. ROOM LIGHTS
FE/FIT-7620-1, 9820	0.4		20	1	5	6	1	20	X.X		SPARE
AE/AIT-3537		0.2	20	1	7	8	1	20		X.X	SPARE
FE/FIT-3520	0.2		20	1	9	10	1	25	X.X		SPARE
LE/LIT-7526A		0.2	20	1	11	12	1	20		X.X	SPARE
AE/AIT-9732	0.2		20	1	13	14	1	20	X.X		SPARE
AE/AIT-9739		0.2	20	1	15	16	1	20		X.X	SPARE
FE/FIT-7820	0.2		20	1	17	18	1	20	X.X		SPARE
SUB-TOTAL	1.5	0.8							1.8	0.3	SUB-TOTAL

L1: 3.3 KVA = 27.5 AMPS
L2: 1.1 KVA = 9.1 AMPS

TOTAL CONNECTED LOAD= 4.4 KVA:

NOTE: BREAKERS DENOTED BY AN * SHALL BE GFI TYPE

PANEL DESIGNATION: LP1
VOLTAGE: 120/240V, 1PH,3W
AMPERES: 225

LOCATION: ELECTRICAL ROOM
MAIN: 2P-200
PANEL MOUNTING: WALL

LOAD SERVED	CONNECTED LOAD (KVA) L1	CONNECTED LOAD (KVA) L2	CIRCUIT BREAKER AMPS	CIRCUIT BREAKER POLES	CKT NO.	CKT NO.	CIRCUIT BREAKER POLES	CIRCUIT BREAKER AMPS	CONNECTED LOAD (KVA) L1	CONNECTED LOAD (KVA) L2	LOAD SERVED
SPARE	XX		20	1	1	2	1	20	0.2		AIR DRYER
LOWER LEVEL LIGHTS		0.6	20	1	3	4	1	20		.72	BLOWER RECEPT'S
STAIRWAY LIGHTS	.14		20	1	5	6	1	20	1.1		ELEC. ROOM RECEPT'S
PUMP ROOM LIGHTS		0.9	20	1	7	8	1	20		1.08	LOWER LEVEL RECEPT'S
PUMP ROOM RECEPTACLES	1.08		20	1	9	10	1	20	0.3		CHEMICAL ROOM LIGHTS
BLOWER ROOM LIGHTS		0.9	20	1	11	12	1	20		0.4	EXTERIOR LIGHTS, RECEPT'S
UPPER LEVEL LIGHTS	1.1		20	1	13	14	2	30	2.5		ARC OUTDOOR UNIT
SPARE		XX	20	1	15	16				2.5	
SPARE	XX		20	1	17	18	2	30	2.75		ARC INDOOR UNIT
SPARE		XX	20	1	19	20				2.75	
SPARE	XX		20	1	21	22	1	20	1.66		SUMP PUMP P-42A, P-42B
SPARE		XX	20	1	23	24	1	20		1.66	SUMP PUMP P-42C, P-42D
SPARE	XX		20	1	25	26	1	20	X.X		SPARE
FERRIC SULFATE PUMPS		0.2	20	1	27	28	1	20		1.0	EXHAUST FAN EF-48-2
SPARE	XX		20	1	29	30	2	20	X.X	X.X	SPARE
FERRIC TRANSFER PUMP P-56T		1.13	20	1	31	32					
SPARE	X.X		20	1	33	34	1	20	X.X		SPARE
SPARE		X.X	20	1	35	36	1	20		X.X	SPARE
SPARE	X.X		20	1	37	38	1	20	X.X		SPARE
EMERGENCY PANEL LP2			30	2	39	40	1	20		X.X	SPARE
					41	42	1	20	X.X		SPARE
SUB-TOTAL	2.32	3.73							8.51	10.1	SUB-TOTAL

L1: 10.83 KVA = 90.25 AMPS
L2: 13.84 KVA = 115.3 AMPS

TOTAL CONNECTED LOAD= 24.67 KVA:

NOTE: BREAKERS DENOTED BY AN * SHALL BE GFI TYPE

Issue No.	Description	Date	Drwn.	Chkd.	Resp. Engr.	Proj. Mgr.
–	–	–	–	–	–	–
–	–	–	–	–	–	–
–	–	–	–	–	–	–
–	–	–	–	–	–	–
1	REVISED PRIOR TO FINAL BID ISSUE	07/14/04	SWC	DFB	TLG	MCG
0	ISSUED FOR BID	6/02/04	SWC	DFB	TLG	MCG

David F. Besinger 7-14-04
STATE OF TEXAS DAVID F. BESINGER 52236 REGISTERED PROFESSIONAL ENGINEER

HDR Engineering, Inc.

BAR LENGTH ON ORIGINAL DRAWING EQUALS ONE INCH. ADJUST SCALE ACCORDINGLY.

Project Manager: M. C. GRAVES
Designed: T. L. GLAUM
Designed:
Checked: D. F. BESINGER
Drawn: S. W. CAMPBELL

WATER TREATMENT PLANT EXPANSION 2004
THE CITY OF KERRVILLE, TEXAS

ELECTRICAL & INSTRUMENTATION ELECTRICAL

PANELBOARD & LIGHTING FIXTURE SCHEDULES AND ELECTRICAL DETAILS

Date: JUNE, 2004
Scale: NOT TO SCALE
Project No.: 08340-025-036
File Name: 06E-04.dwg
Drawing No.: 06E-04
Issue: 1

C:\WINDM\0011120036\DWG\06E-04.DWG, 06E-04, 7/13/2004 11:52:35 AM, scampbel

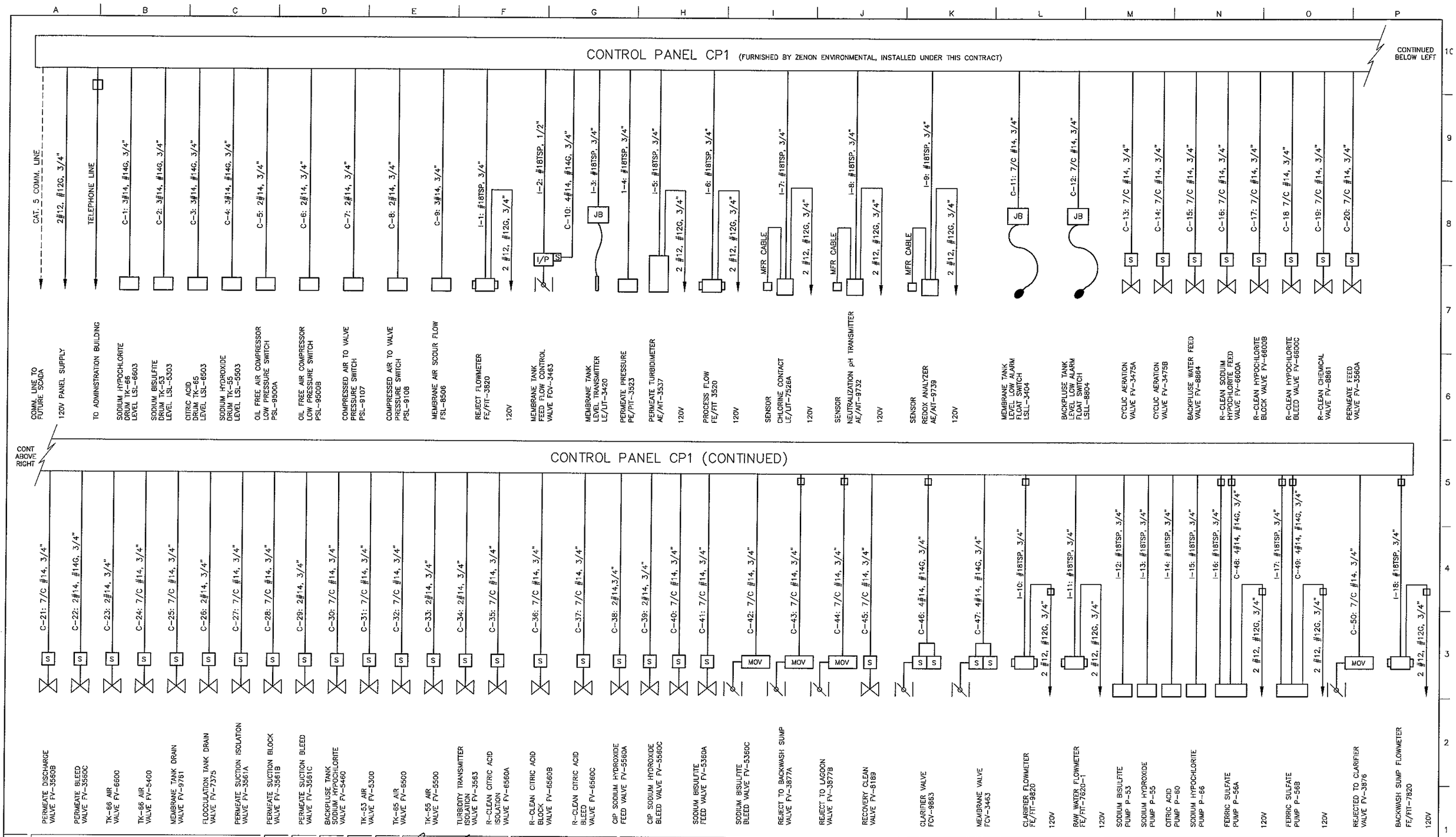

Issue No.	Description	Date	Drwn.	Chkd.	Resp. Engr.	Proj. Mgr.
–	–	–	–	–	–	–
–	–	–	–	–	–	–
–	–	–	–	–	–	–
–	–	–	–	–	–	–
1	REVISED PRIOR TO FINAL BID ISSUE	07/14/04	SWC	DFB	TLG	MCG
0	ISSUED FOR BID	6/02/04	SWC	DFB	TLG	MCG

David F. Besinger 7-14-04
STATE OF TEXAS
DAVID F. BESINGER
52236
REGISTERED PROFESSIONAL ENGINEER

HDR Engineering, Inc.

BAR LENGTH ON ORIGINAL DRAWING EQUALS ONE INCH. ADJUST SCALE ACCORDINGLY.

Project Manager: M. C. GRAVES
Designed: T. L. GLAUM
Designed:
Checked: D. F. BESINGER
Drawn: S. W. CAMPBELL

WATER TREATMENT PLANT EXPANSION 2004

THE CITY OF KERRVILLE, TEXAS

ELECTRICAL & INSTRUMENTATION INSTRUMENTATION

I&C ONE-LINE DIAGRAM

Date	Project No.	Drawing No.	Issue
JUNE, 2004	08340-025-036	06E-05	1
Scale: AS NOTED	File Name: 06E-05.dwg		

C:\WINDM\0011120036\DWG\06E-05.DWG, 06E-05, 7/14/2004 11:17:45 AM, scampbel