100% Construction Documents

City of Kerrville
Athletic Complex Field House

October 21, 2016

Standard Abbreviations

@	AT
ABV	ABOVE
AFF	ABOVE FINISHED FLOOR
ACOUST	ACOUSTICAL
ACT	ACOUSTICAL TILE
ADA	AMERICANS WITH DISABILITIES ACT
ADJ	ADJUSTABLE
AGG	AGGREGATE
A/C	AIR CONDITIONING
ALT	ALTERNATE
ALUM	ALUMINUM
AB	ANCHOR BOLT
ANOD	ANODIZED
APPX	APPROXIMATE
ARCH	ARCHITECT(URAL)
ASPH	ASPHALT
AUTO	AUTOMATIC
BSMT	BASEMENT
BRG	BEARING
BM	BENCH MARK
BTWN	BETWEEN
BVL	BEVELED
BLK	BLOCK
BLKG	BLOCKING
BD	BOARD
BW	BOTH WAYS
BOTT	BOTTOM
BRK	BRICK
BRZ	BRONZE
BLDG	BUILDING
BL	BUILDING LINE
BUR	BUILT UP ROOF
CAB	CABINET(S)
CO	CASED OPENING
CSMT	CASEMENT
CL	CENTER LINE
CLG	CEILING
CEM	CEMENT
CER	CERAMIC
CT	CERAMIC TILE
CIR	CIRCLE
CLR	CLEAR(ANCE)
CR	COLD ROLLED
COL	COLUMN
COMP	COMPOSITE, COMPOSITION
CONC	CONCRETE
CMU	CONCRETE MASONRY UNIT
CONST	CONSTRUCTION
CONT	CONTINUOUS, CONTINUE
CJ	CONTROL JOINT
CG	CORNER GUARD
CTR	COUNTER
CRS	COURSE(S)
CF	CUBIC FOOT
CFM	CUBIC FOOT PER MINUTE
CY	CUBIC YARD
D	DEPTH, DEEP
DEM	DEMOLISH, DEMOLITION
DTL	DETAIL
DIAG	DIAGONAL
DIA	DIAMETER
DIM	DIMENSION
DISP	DISPOSAL
DIV	DIVISION
DR	DOOR
DH	DOUBLE HUNG
DS	DOWNSPOUT
DWR	DRAWER
DWG	DRAWING
DF	DRINKING FOUNTAIN
DW	DISHWASHER
EA	EACH
EW	EACH WAY
EF	EACH FACE
ELEC	ELECTRIC(AL)
EWC	ELECTRIC WATER COOLER
EL	ELEVATION
ELEV	ELEVATOR
EMER	EMERGENCY
ENG	ENGINEERING
EQ	EQUAL
EQPT	EQUIPMENT
EST	ESTIMATE(D)
EXH	EXHAUST
EXIST	EXISTING
EJ	EXPANSION JOINT
EXP	EXPOSED
EXT	EXTERIOR
FOW	FACE OF WALL
FOS	FACE OF STUDS(S)
FR	FIBERGLASS REINFORCED
FIN	FINISH(ED)
FF	FINISHED FLOOR
FE	FIRE EXTINGUISHER
FLR	FLOOR(ING)
FD	FLOOR DRAIN
FLUOR	FLUORESCENT
FTG	FOOTING
FDN	FOUNDATION
GA	GAGE, GAUGE
GALV	GALVANIZED
GI	GALVANIZED IRON
GC	GENERAL CONTRACTOR
GL	GLASS, GLAZING
GD	GRADE(ING)
GYP BD	GYPSUM BOARD
HC	HANDICAPPED
HDW	HARDWARE
HTG	HEATING
HVAC	HEATING/VENTILATING AIR CONDITIONING
HT	HEIGHT, HIGH
HC	HOLLOW CORE
HCWD	HOLLOW CORE WOOD DOOR
HDF	HIGH DENSITY FIBER BOARD
HM	HOLLOW METAL
HORIZ	HORIZONTAL
HB	HOSE BIB
INCAND	INCANDESCENT
INCL	INCLUDE(D), INCLUDING
	INSIDE DIAMETER
INSUL	INSULATE(D), INSULATION
INT	INTERIOR
INV	INVERT
JT	JOINT
JST	JOIST

LAM	LAMINATE(D)
LAV	LAVATORY
LH	LEFT HAND
L	LENGTH
LT	LIGHT
LF	LINEAR FEET
LL	LIVE LOAD
MH	MANHOLE
MFR	MANUFACTURE(R)
MRB	MARBLE
MAS	MASONRY
MO	MASONRY OPENING
MATL	MATERIAL(S)
MAX	MAXIMUM
MECH	MECHANIC(AL)
MC	MEDICINE CABINET
MED	MEDIUM
MTL	METAL
MIN	MINIMUM
MIR	MIRROR
MISC	MISCELLANEOUS
MLD	MOLDING, MOULDING
MT(D)	MOUNT(ED), MOUNTING
MULL	MULLION
NAT	NATURAL
NIC	NOT IN CONTRACT
NOM	NOMINAL
NR	NOISE REDUCTION
NTS	NOT TO SCALE
OC	ON CENTER(S)
OD	OUTSIDE DIAMETER
OH	OVERHEAD
OPG	OPENING
OPP	OPPOSITE
OPP HND	OPPOSITE HAND
PCF	POUNDS / CUBIC FOOT
PED	PEDESTAL
PEMB	PRE-ENGINEERED METAL BUILDING
PH	PHONE
P	PROPERTY LINE
PL	PLATE
PLAM	PLASTIC LAMINATE
PLAS	PLASTER
PLF	POUNDS / LINEAL FOOT
PSF	POUNDS / SQUARE FOOT
PSI	POUNDS / SQUARE INCH
PT	POINT
PT. GD.	PAINT GRADE
PTC	POST-TENSIONED CONC.
PTD	PAINTED
PUE	PUBLIC UTILITY EASEMENT
PVC	POLYVINYL CHLORIDE
QTMT	QUARRY TILE
RA	RETURN AIR
RAD	RADIUS
RE	REFER
REF	REFRIGERATOR
REG	REGISTER
REINF	REINFORCE(D)
REM	REMOVE
REQD	REQUIRED
RES	RESILIENT
REV	REVISION(S)
RFG	REVISED ROOFING
RH	RIGHT HAND
RM	ROOM
RO	ROUGH OPENING
ROW	RIGHT OF WAY
RSC	ROUGH SAWN CEDAR
RZ	RISER
SCHED	SCHEDULE
SCWD	SOLID CORE WOOD DOOR
SD	SMOKE DETECTOR
SECT	SECTION
SF	SQUARE FEET
SH	SHELF
SH	SHELVES, SHELVING
SHT	SHEET
SIM	SIMILAR
SK. LT.	SKYLIGHT
SPEC	SPECIFICATION(S)
SQ	SQUARE
SS	STAINLESS STEEL
STD	STANDARD
STG.	STORAGE
ST. GD.	STAIN GRADE
STL	STEEL
STRUCT	STRUCTURAL
STSM	STANDING SEAM
SUSP.	SUSPENDED
SYM	SYMMETRY, SYMMETRICAL
SYP	SOUTHERN YELLOW PINE
TR	TREAD
T&G	TONGUE & GROOVE
TAS	TEXAS ACCESSIBILITY STANDARDS
TEL	TELEPHONE
THK	THICK(NESS)
THR	THRESHOLD
TMP.	TEMPERED
TOB	TOP OF BEAM
TOS	TOP OF STEEL
TOW	TOP OF WALL
TSL	TOP OF SLAB
TV	TELEVISION
TYP	TYPICAL
UNF	UNFINISHED
UNO	UNLESS NOTED OTHERWISE
UR	URINAL
VB	VAPOR BARRIER
VC	VINYL COMPOSITION
VERT	VERTICAL
VT	VINYL TILE
VTR	VENT THROUGH ROOF
W	WIDTH, WIDE
W/	WITH
WC	WATER CLOSET
WD	WOOD
WH	WATER HEATER
WI	WROUGHT IRON
WIN	WINDOW
W/O	WITHOUT
WOLM	WOLMANIZED
WP	WATER PROOF(ING)
WWF	WELDED WIRE FABRIC

Project General Notes

A. THE CONTRACTOR SHALL FIELD VERIFY ALL CONDITIONS AND DIMENSIONS PRIOR TO ANY WORK AND SHALL BE RESPONSIBLE FOR ALL WORK AND MATERIAL INCLUDING THOSE FURNISHED BY SUBCONTRACTORS.

B. ALL CONSTRUCTION SHALL COMPLY WITH THE LATEST ADOPTED EDITION OF THE BUILDING CODES AND ALL LOCAL CODES.

C. THE CONTRACTOR SHALL REPORT TO THE ARCHITECT ANY ERROR INCONSISTENCIES OR OMISSION HE/SHE MAY DISCOVER. THE CONTRACTOR IS RESPONSIBLE FOR CORRECTING ANY ERROR AFTER THE START OF CONSTRUCTION WHICH HAS NOT BEEN BROUGHT TO THE ATTENTION OF THE ARCHITECT. THE MEANS OF CORRECTING ANY ERROR SHALL FIRST BE APPROVED BY THE ARCHITECT.

D. THE ARCHITECT WILL REVIEW AND APPROVE SHOP DRAWINGS AND SAMPLES FOR CONFORMANCE WITH THE DESIGN CONCEPT OF THE PROJECT. THE ARCHITECT'S APPROVAL OF A SEPARATE ITEM SHALL NOT INDICATE APPROVAL OF AN ASSEMBLY IN WHICH THE ITEM FUNCTIONS.

E. IT SHALL BE THE RESPONSIBILITY OF THE CONTRACTOR TO LOCATE ALL EXISTING UTILITIES WHETHER SHOWN HEREON OR NOT AND TO PROTECT THEM FROM DAMAGE. THE CONTRACTOR SHALL BEAR ALL EXPENSES FOR REPAIR OR REPLACEMENT OF UTILITIES OR OTHER PROPERTY DAMAGED BY OPERATIONS IN CONJUNCTION WITH THE EXECUTION OF WORK.

F. EXISTING ELEVATIONS AND LOCATIONS TO BE JOINED SHALL BE VERIFIED BY THE CONTRACTOR BEFORE CONSTRUCTION. IF THEY DIFFER FROM THOSE SHOWN ON THE DRAWINGS THE CONTRACTOR SHALL NOTIFY THE ARCHITECT SO THAT MODIFICATIONS CAN BE MADE BEFORE PROCEEDING WITH WORK.

G. CONTRACTOR SHALL PROVIDE TEMPORARY WATER, POWER, AND TOILET FACILITIES AS REQUIRED BY THE CITY OR GOVERNING AGENCIES.

H. CITY APPROVED PLANS SHALL BE KEPT IN A PLAN BOX AND SHALL NOT BE USED BY WORKMEN. ALL CONSTRUCTION SETS SHALL REFLECT SAME INFORMATION. THE CONTRACTOR SHALL ALSO MAINTAIN, IN GOOD CONDITION, A COMPLETE SET OF PLANS WITH ALL REVISIONS, ADDENDA AND CHANGE ORDERS, ON THE PREMISES AT ALL TIMES. THESE ARE TO BE UNDER THE CARE OF THE JOB SUPERINTENDENT.

I. THE CONTRACTOR SHALL BE RESPONSIBLE FOR THE COMPLETE SECURITY OF THE SITE WHILE JOB IS IN PROGRESS AND UNTIL JOB IS COMPLETED.

J. ALL DEBRIS SHALL BE REMOVED FROM PREMISES AND ALL AREAS BE LEFT IN A CLEAN BROOM CONDITION AT ALL TIMES.

K. FIRE EXTINGUISHERS: VERIFY REQUIREMENTS AND LOCATIONS WITH FIRE MARSHALL.

L. THE GENERAL CONTRACTOR SHALL BE RESPONSIBLE FOR AND SHALL REPLACE OR REMEDY ANY FAULTY, IMPROPER OR INFERIOR MATERIAL OR WORKMANSHIP OR ANY DAMAGE WHICH SHALL APPEAR WITHIN ONE (1) YEAR AFTER COMPLETION AND ACCEPTANCE OF THE WORK UNDER THIS CONTRACT. EXCEPTION: THE ROOFING SUBCONTRACTOR SHALL FURNISH A MAINTENANCE AGREEMENT COSIGNED BY THE GENERAL CONTRACTOR TO MAINTAIN THE ROOFING IN A WATERTIGHT CONDITION FOR A PERIOD OF TWO (2) YEARS STARTING AFTER DATE OF SUBSTANTIAL COMPLETION, UNLESS OTHERWISE NOTED IN THE SPECIFICATIONS.

M. CONTRACTOR SHALL COMPLY WITH ALL LOCAL CODE REGULATIONS AND STATE DEPARTMENT OF INDUSTRIAL REGULATIONS, DIVISION OF INDUSTRIAL SAFETY (O.S.H.A.) REGULATIONS.

N. REFERENCES OF DRAWINGS IS FOR CONVENIENCE ONLY AND DOES NOT LIMIT APPLICATION OF ANY DRAWING OR DETAIL.

O. CONTRACTOR SHALL REFER TO AND CROSS-CHECK DETAILS, DIMENSIONS, NOTES, AND ALL REQUIREMENTS ON THE ARCHITECTURAL DRAWINGS WITH RELATED REQUIREMENTS ON THE STRUCTURAL, MECHANICAL, ELECTRICAL, AND/OR CIVIL DRAWINGS.

P. THE CONTRACTOR SHALL PROVIDE ADEQUATE PROTECTION FOR THE SAFETY OF THE OWNER'S EMPLOYEES, WORKMEN, AND ALL OTHERS, AT LEAST DURING PROJECT CONSTRUCTION.

Q. THE CONTRACTOR SHALL SAFEGUARD THE OWNER'S PROPERTY DURING CONSTRUCTION AND SHALL REPLACE ANY DAMAGES TO PROPERTY OF THE OWNER TO ORIGINAL CONDITION OR BETTER.

R. THE STRUCTURE IS DESIGNED AS A STABLE UNIT AFTER ALL COMPONENTS ARE IN PLACE. THE CONTRACTOR SHALL BE RESPONSIBLE TO PROVIDE TEMPORARY BRACING/SHORING AS REQUIRED OR PORTION THEREOF DURING CONSTRUCTION.

S. PROVIDE ALL NECESSARY BLOCKING, BACKING, SLEEVES, AND FRAMING FOR LIGHT FIXTURES, ELECTRICAL UNITS, A/C EQUIPMENT, COUNTERS, HANDRAILS, RAILS, AND ALL OTHER ITEMS REQUIRING SAME.

T. THE ARCHITECT MAKES NO GUARANTEE FOR PRODUCTS NAMED BY TRADE OR MANUFACTURER.

U. THE CONTRACTOR SHALL BE RESPONSIBLE FOR THE ACCURACY OF THE BUILDING LINES AND LEVELS. THE CONTRACTOR SHALL COMPARE CAREFULLY THE LINES AND LEVELS SHOWN ON THE DRAWING WITH THE EXISTING LEVELS FOR THE LOCATION AND CONSTRUCTION OF THE WORK AND SHALL NOTIFY THE ARCHITECT OF ANY DISCREPANCIES BEFORE PROCEEDING WITH THE WORK.

V. ALL TRADES SHALL DO THEIR OWN CUTTING, FITTING, PATCHING, ETC., TO MAKE THE SEVERAL COME TOGETHER PROPERLY AND FIT AND TO BE RECEIVED BY THE WORK OF THE OTHER TRADES.

W. THE CONTRACTOR SHALL BE REQUIRED TO PAY FOR ALL NECESSARY PERMITS AND/OR FEES WITH RESPECT TO THE WORK. BUILDING PERMIT APPLICATION BY OWNER. GENERAL CONTRACTOR TO PICK UP PERMIT AND MAKE FINAL PAYMENT.

X. DO NOT SCALE DRAWINGS. NOTIFY ARCHITECT OF ANY DIMENSIONAL DISCREPANCIES FOR CLARIFICATION.

Y. DIMENSIONS, UNLESS OTHERWISE NOTED: TO FACE OF CONCRETE OR MASONRY WORK; TO CENTERLINE OF COLUMNS OR OTHER GRID POINTS; TO FACE OF STUDS AND FRAMED WINDOW OR DOOR OPENINGS; TO FINISH FACE OF CLEAR WIDTHS.

Location Map

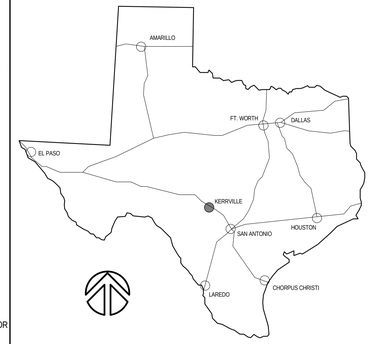

Vicinity Map

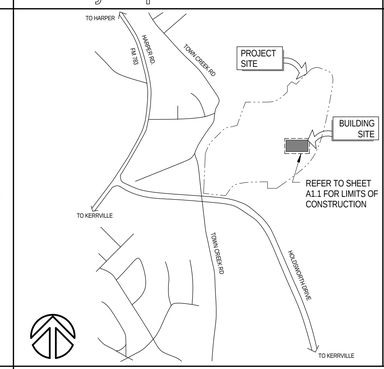

Contact Information

Owner/Client
City of Kerrville
701 Main St.
Kerrville, TX 78028
Phone 830-257-8000

Architect
Peter W. Lewis Architect + Associates
334 West Water Street
Kerrville, TX 78028
Phone 830-896-4220, Fax 830-896-4226

Structural Engineer
Maxwell Engineering, PLLC
911 Panorama Dr.
Kerrville, TX 78028
Phone 830-895-0032, Fax 830-895-0033

MEP Engineer
ESA Mechanical & Electrical Engineering, inc.
1100 NW Loop 410, Ste. 460
San Antonio, TX 78213
Phone 210-342-3483, Fax 210-342-3641

Civil Engineer
Hewitt Engineering, Inc.
716 Barnett Street
Kerrville, TX 78028
Phone 830-315-8800

Electric
Kerrville Public Utility Board
2250 Memorial Blvd.
Kerrville, TX 78028
Phone 830-257-3050

Telephone
Hill Country Telephone Cooperative
220 Carolyn St. W.
Ingram, TX 78025
Phone 830-367-5333

Water/Waste Water
City of Kerrville
701 Main St.
Kerrville, TX 78028
Phone 830-792-8336

Applicable Codes

2006 INTERNATIONAL BUILDING CODE
2008 NATIONAL ELECTRIC CODE
2006 INTERNATIONAL PLUMBING CODE
2006 INTERNATIONAL MECHANICAL CODE
2006 INTERNATIONAL ENERGY CONSERVATION CODE
2006 INTERNATIONAL FIRE CODE

TEXAS ACCESSIBILITY STANDARDS, CURRENT EDITION AMERICANS WITH DISABILITIES ACT

REFER TO SHEET G1.3 FOR ADDITIONAL INFORMATION

Symbol Legend

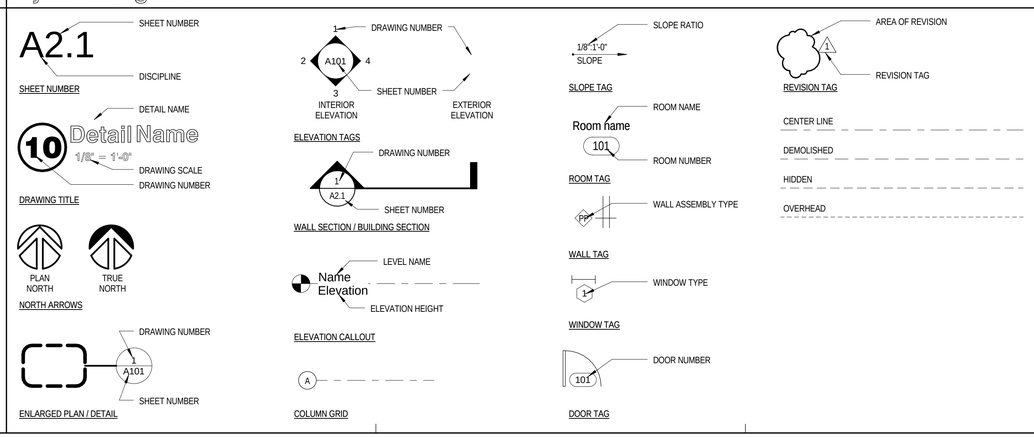

Sheet Index

01 - General		
G1.1	Cover Sheet	10/21/16
G1.2	ADA/TAS Details	10/21/16
G1.3	Code Compliance	10/21/16
02 - Architecture		
A1.1	Site Plan	10/21/16
A1.2	Field Plans	10/21/16
A1.3	Site Details	10/21/16
A2.1	Foundation Dimensional Control Plan	10/21/16
A2.2	Floor Plan	10/21/16
A2.3	Enlarged Plan	10/21/16
A2.4	Enlarged Plans & Plan Details	10/21/16
A3.1	Exterior Elevations	10/21/16
A4.1	Building Sections	10/21/16
A4.2	Wall Sections	10/21/16
A4.3	Wall Sections	10/21/16
A5.1	Roof Plan	10/21/16
A6.1	Reflected Ceiling Plan	10/21/16
A7.1	Door and Window Schedules	10/21/16
A7.2	Door & Window Details	10/21/16
A8.1	Interior Elevations	10/21/16
A8.2	Interior Elevations	10/21/16
A9.1	Finishes Plan & Schedule	10/21/16
03 - Structural		
S1.1	Foundation Plan - Field House	10/21/16
S2.1	Framing Plan - Field House	10/21/16
S3.1	Details	10/21/16
S4.1	General Structural Notes	10/21/16
04.1 - MEP Site		
MEP1.1	Mech., Elec. and Plumbing Site Plan	10/21/16
04.2 - Mechanical		
M1.1	Mechanical Plan	10/21/16
M2.1	Mechanical Schedules and Details	10/21/16
M3.1	Mechanical Details	10/21/16
04.3 - Electrical		
E1.1	Lighting Plan	10/21/16
E2.1	Power and Signal Plan	10/21/16
E3.1	Electrical One-Line Diagram	10/21/16
E3.2	General Electrical Notes	10/21/16
E4.1	Electrical Schedules	10/21/16
E4.2	Electrical Schedules	10/21/16
04.4 - Plumbing		
P1.1	Plumbing Plan	10/21/16
P2.1	Enlarged Plumbing Plans	10/21/16
P3.1	Plumbing Legend & Schedules	10/21/16
P3.2	Plumbing Details and Riser	10/21/16
04.5 - Fire Sprinkler		
FS1.1	Fire Sprinkler Plan	10/21/16
05 - Civil		
C1	Cover Sheet, Sheet Index, and Vicinity Map	10/21/16
C2	General Notes	10/21/16
C3	Dimensional Control Plan	10/21/16
C4	Grading, Drainage, and Paving Plan	10/21/16
C5	Utility Plan	10/21/16
C6	Field Layout	10/21/16
C7	Fence Details	10/21/16
C8	Paving Details	10/21/16
C9	Utility Details Sheet 1 of 2	10/21/16
C10	Utility Details Sheet 2 of 2	10/21/16
C11	Contractor Staging Area Map	10/21/16
C12	Survey Horizontal and Vertical Control Plan	10/21/16

Alternates

ADD ALTERNATE NO. 1: EXTERIOR BASEBALL FIELD
DESCRIPTION: EXECUTION OF ALL CIVIL, STRUCTURAL, MEP AND ARCHITECTURAL ITEMS AS DESCRIBED WITHIN THIS SET OF CONSTRUCTION DOCUMENTS AS IT PERTAINS TO THE EXTERIOR BASEBALL FIELD. THIS IS TO INCLUDE, BUT IS NOT LIMITED TO PAVING, UTILITIES, FOUNDATIONS, ARTIFICIAL TURF AND SUBGRADE, FENCING, DUGOUTS, BASEBALL EQUIPMENT AND FIELD LIGHTING. REFER TO SHEET A1.1 FOR DELINIATION OF ADD ALTERNATE. PROVIDE SEEDED HYDROMULCH IN LIEU OF BASEBALL FIELD IN BASE BID. COORDINATE SEED MIX WITH OWNER PRIOR TO INSTALLATION.

!!NOTE TO BIDDERS!!

THE "CITY OF KERRVILLE ATHLETIC COMPLEX FIELD HOUSE" IS BEING DESIGNED AND CONSTRUCTED WITHIN AN EXISTING, AND ONGOING CONSTRUCTION PROJECT, THE "KERRVILLE SPORTS COMPLEX." THE AWARDED GENERAL CONTRACTOR FOR THE "CITY OF KERRVILLE ATHLETIC COMPLEX FIELD HOUSE", WILL COORDINATE ALL CONSTRUCTION ACTIVITIES WITH OWNER (CITY OF KERRVILLE), PRIOR TO AND DURING THE CONSTRUCTION OF THIS FACILITY. ANY DAMAGE DONE TO ANY COMPLETED AREAS OF CONSTRUCTION ON THE "KERRVILLE SPORTS COMPLEX" WILL BE BROUGHT TO THE OWNERS ATTENTION IMMEDIATELY, AND THE AWARDED GENERAL CONTRACTOR FOR THE "CITY OF KERRVILLE ATHLETIC COMPLEX FIELD HOUSE" WILL BE RESPONSIBLE FOR ALL REPAIRS, AT THEIR OWN COST.

REVISIONS

NO.	DESCRIPTION	DATE

PETER LEWIS
ARCHITECT + ASSOCIATES
334 West Water Street
Kerrville, TX 78028
(830) 896-4220
(830) 896-4226
www.pwlarchitect.com

REGISTERED ARCHITECT PETER W. LEWIS 18255 STATE OF TEXAS
10/21/16

City of Kerrville Athletic Complex Field House
Kerrville, Texas

NOT PUBLISHED. ALL RIGHTS RESERVED BY THE ARCHITECT. DRAWINGS AND SPECIFICATIONS AS INSTRUMENTS OF SERVICE ARE AND SHALL REMAIN THE PROPERTY OF THE ARCHITECT. THEY SHALL NOT BE USED ON OTHER PROJECTS OR EXTENSIONS TO THIS PROJECT EXCEPT BY AGREEMENT IN WRITING AND WITH APPROPRIATE COMPENSATION TO THE ARCHITECT. CONTRACTOR IS RESPONSIBLE FOR THE CONFIRMING AND CORRELATING DIMENSIONS AT JOB SITE. THE ARCHITECT WILL NOT BE RESPONSIBLE FOR CONSTRUCTION MEANS, METHODS, TECHNIQUES, SEQUENCES OR FOR SAFETY PRECAUTIONS AND PROGRAMS IN CONNECTION WITH THE PROJECT.

PROJECT NO. 20-1605
DATE 10/21/16

Cover Sheet

SHEET NUMBER
G1.1

10/25/2016 1:33:37 PM

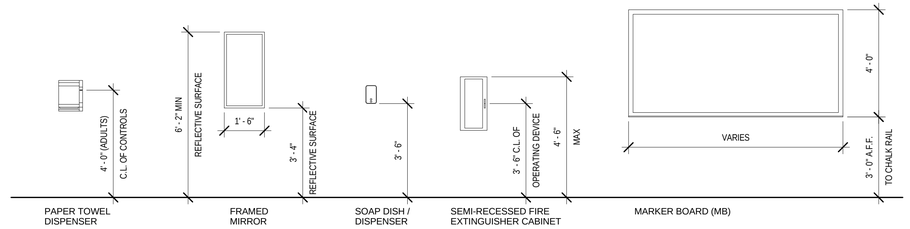

PAPER TOWEL DISPENSER

FRAMED MIRROR

SOAP DISH / DISPENSER

SEMI-RECESSED FIRE EXTINGUISHER CABINET

MARKER BOARD (MB)

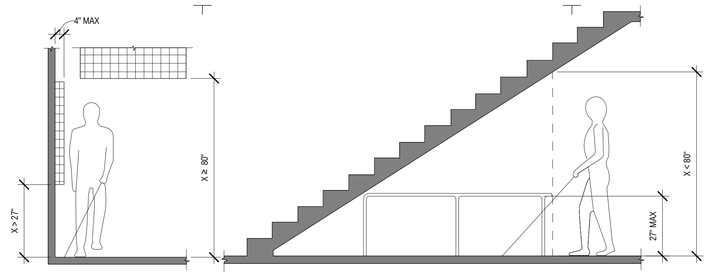

307.2 PROTRUSION LIMITS

307.4 VERTICAL CLEARANCE

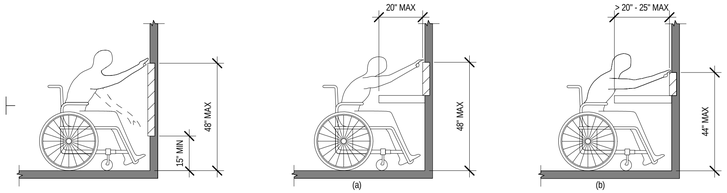

308.2.1 UNOBSTRUCTED FORWARD REACH

308.2.2 OBSTRUCTED HIGH FORWARD REACH

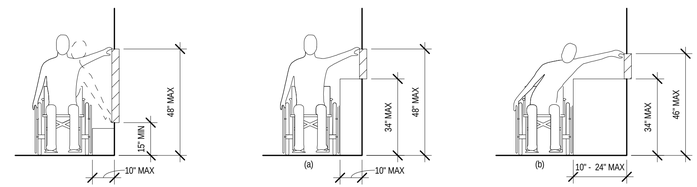

308.3.1 UNOBSTRUCTED SIDE REACH

308.3.2 OBSTRUCTED HIGH SIDE REACH

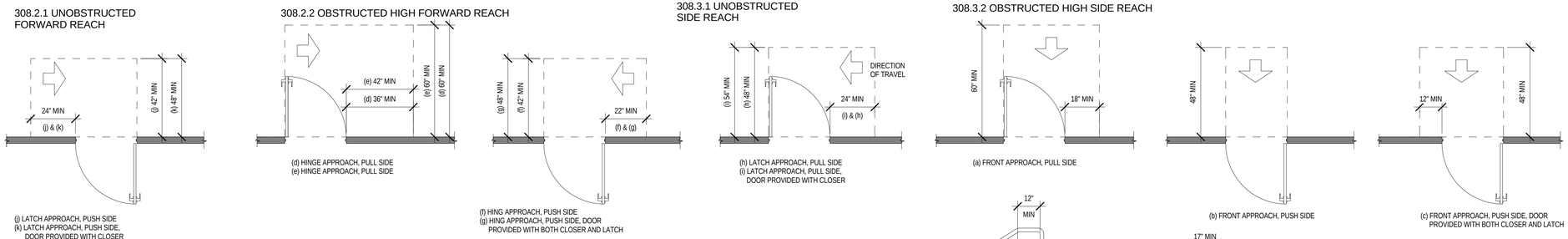

(j) LATCH APPROACH, PUSH SIDE
(k) LATCH APPROACH, PUSH SIDE, DOOR PROVIDED WITH CLOSER

(d) HINGE APPROACH, PULL SIDE
(e) HINGE APPROACH, PULL SIDE

(f) HING APPROACH, PUSH SIDE
(g) HING APPROACH, PUSH SIDE, DOOR PROVIDED WITH BOTH CLOSER AND LATCH

(h) LATCH APPROACH, PUSH SIDE
(i) LATCH APPROACH, PULL SIDE, DOOR PROVIDED WITH CLOSER

(a) FRONT APPROACH, PULL SIDE

(b) FRONT APPROACH, PUSH SIDE

(c) FRONT APPROACH, PUSH SIDE, DOOR PROVIDED WITH BOTH CLOSER AND LATCH

404.2.4.1 MANEUVERING CLEARANCES AT MANUAL SWINGING DOORS AND GATES

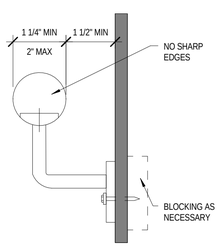

505.5 HANDRAILS CLEARANCE

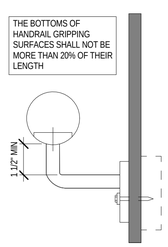

505.6 HORIZONTAL PROJECTIONS BELOW GRIPPING SURFACE

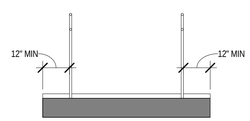

405.9.1 EXTENDED FLOOR OR GROUND SURFACE EDGE PROTECTION (IF NO BOTTOM RAIL IS PROVIDED)

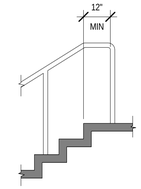

505.10.2 TOP HANDRAIL EXTENSION AT STAIRS

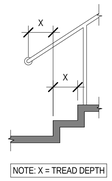

505.10.3 BOTTOM HANDRAIL EXTENSION AT STAIRS

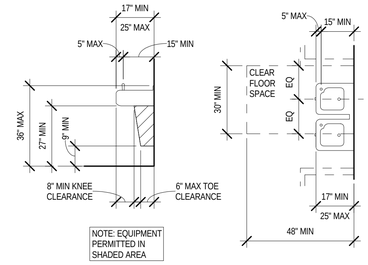

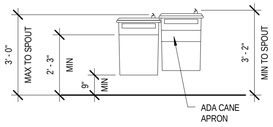

602 DRINKING FOUNTAINS

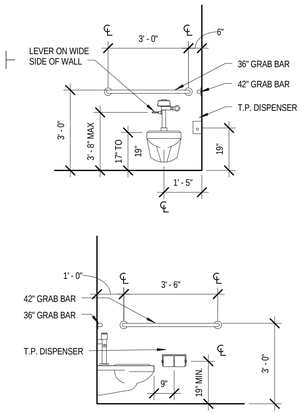

WATER CLSOETS

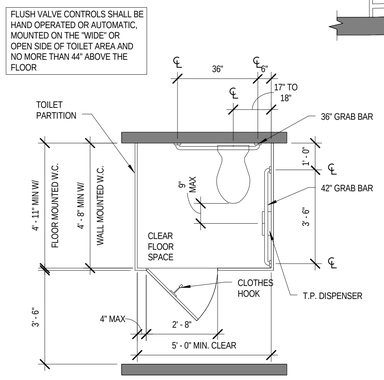

ACCESSIBLE TOILET STALL

604 WATER CLOSET AND TOILET COMPARTMENTS

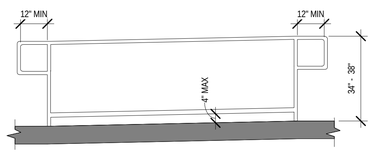

505.10.1 TOP AND BOTTOM HANDRAIL EXTENTION AT RAMP

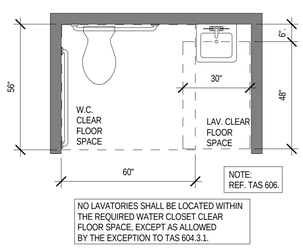

604.3.1 CLEAR FLOOR SPACE AND CLEARANCES

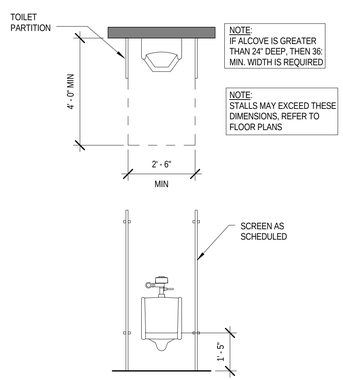

605 URINALS

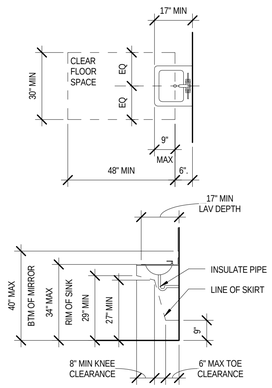

606 LAVATORIES AND SINKS

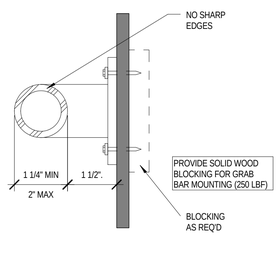

609.2.1 CIRCULAR CROSS SECTION
609.8 STRUCTURAL STRENGTH

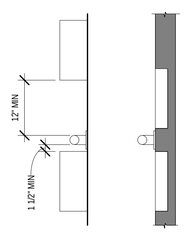

(a) PROJECTING OBJECTS (b) RECESSED OBJECTS

609.3 SPACING GRAP BARS

Special Accessibility Requirements

* DOOR HARDWARE:

Doors shall have Lever-operated mechanisms, push-type mechanisms, or U-shaped handles.

Handles, pulls, latches, locks, and other operating devices on accessible doors shall have a shape that is easy to grasp with one hand and does not require tight grasping, tight pinching, or twisting of the wrist to operate.

Mounting Height: Hardware required for accessible door passage shall be mounted 34" minimum or 48" maximum above finish floor or ground.

Closer Operation: The sweep period of a closer shall be adjusted so that from an open position of 90 degrees, the time required to move the door to a position of 12 degrees from the latch is 5 seconds minimum.
The maximum force for pushing or pulling open a door shall be as follows:
(a) exterior hinged doors: 8.5# ANSI.
(b) interior hinged doors: 5 lbf
(c) sliding or folding doors: 5 lbf
Except that fire doors shall have the minimum opening force allowable by the appropriate administrative authority. NFPA 101 52.1.4.4 30#
These forces do not apply to the force required to retract latch bolts or disengage other devices that may hold the door in a closed position. 15#

Full-powered automatic doors shall comply with ANSI/BHMA A156.10. Low-energy and power-assisted doors shall comply with ANSI/BHMA A156.19.Such doors shall not open to back check faster than 3 seconds and shall require no more than 15 lbf (66.6N) to stop door movement. If user-operated controls are provided they shall comply with Texas Accessibility Standards Section 4.27.

* CONTROLS AND OPERATING MECHANISMS:

Height: Switches, thermostats, controls, dispensers, receptacles, and the highest operable part of other operable equipment shall be placed no higher than 48" above the floor and within the reach ranges required by the Texas Accessibility Standards (TAS).
Receptacles of electrical and communications system on walls shall be mounted no less than 15" above the floor.
EXCEPTION: These requirements do not apply where the use of special equipment dictates otherwise or where electrical and communications systems receptacles are not normally intended for use by building occupants.

Flush controls shall be hand operated or automatic. Controls for flush valves shall be mounted on the wide side of toilet areas (side open to clear floor space)
areas no more than 44" above the floor.

Operation: Controls and operating mechanisms shall be operable with one hand and shall not require tight grasping, pinching, or twisting of the wrist. The force required to activate controls shall be no greater than 5 lbf.

* GRAB BARS, AND TUB AND SHOWER SEATS:

Grab bars with circular cross sections shall have an outside diameter of 1 1/4 " minimum and 2" maximum.

If handrails or grab bars are mounted adjacent to a wall, the space between the wall and the grab bar shall be 1-1/2".

Allowable stresses shall not be exceeded for materials used when a vertical or horizontal force of 250 lbf is applied at any point on the grab bar, fastener, mounting device, or supporting structure.

Rotation of grab bars within their fittings is not acceptable.

Sharp or abrasive elements are not acceptable for a handrail or grab bar or any wall or other surface adjacent to it. Edges shall have a minimum radius of 1/8".

* SIGNAGE.

Characters shall be selected from fonts where the width of the uppercase letter "O" is 55 percent minimum and 110 percent maximum of the height of the uppercase letter "I".
Lower case letters are permitted.

Brailed characters and pictorial symbol signs (pictograms) shall be raised 1/32" minimum above their background, upper case sans serif or simple serif type and shall be accompanied with Grade 2 Braille. Raised characters shall be at least 5/8" high, but no higher than 2". Pictograms shall be accompanied by the equivalent verbal description placed directly below the pictogram. The border dimension of the pictogram shall be 6" minimum in height.

Finish: The characters and background of signs shall be eggshell, matte, or other non-glare finish. Characters and symbols shall contrast with their background.

Permanent identification signs provided for rooms and spaces, signs shall be installed on the wall adjacent to the latch side of the door. Where there is no wall space to the latch side of the door, including at double leaf doors, signs shall be placed on the nearest adjacent wall. Mounting height shall be 60" above the finish floor to the centerline of the sign & 8" off latch side jam.

Mounting location for such signage shall be so that a person may approach within 3" of signage without encountering protruding objects or standing within the swing of a door.

INTERNATIONAL SYMBOL OF ACCESSIBILITY SHALL BE MOUNTED ABOVE TOILET ROOM SIGNAGE ON EXT. OF THE TOILET ROOM DOOR WITH BRAILLE SYSTEM.

REVISIONS

NO.	DESCRIPTION	DATE

PETER LEWIS
ARCHITECT + ASSOCIATES
334 West Water Street
Kerrville, TX 78028
(830) 896-4220
(830) 896-4226
www.pwlarchitect.com

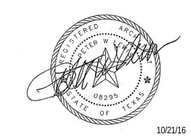

10/21/16

CITY OF KERRVILLE 1889 TEXAS

City of Kerrville Athletic Complex Field House

Kerrville, Texas

NOT PUBLISHED. ALL RIGHTS RESERVED BY THE ARCHITECT. DRAWINGS AND SPECIFICATIONS AS INSTRUMENTS OF SERVICE ARE THE EXCLUSIVE PROPERTY OF THE ARCHITECT. THEY SHALL NOT BE USED ON OTHER PROJECTS OR EXTENSIONS TO THIS PROJECT EXCEPT BY AGREEMENT IN WRITING AND WITH APPROPRIATE COMPENSATION TO THE ARCHITECT. CONTRACTOR IS RESPONSIBLE FOR THE CONFIRMING AND CORRELATING DIMENSIONS AT JOB SITE. THE ARCHITECT WILL NOT BE RESPONSIBLE FOR CONSTRUCTION MEANS, METHODS, TECHNIQUES, SEQUENCES OR FOR SAFETY PRECAUTIONS AND PROGRAMS IN CONNECTION WITH THE PROJECT.

PROJECT NO. 20-1605

DATE 10/21/16

ADA/TAS Details

SHEET NUMBER

G1.2

10/26/2016 9:25:14 AM

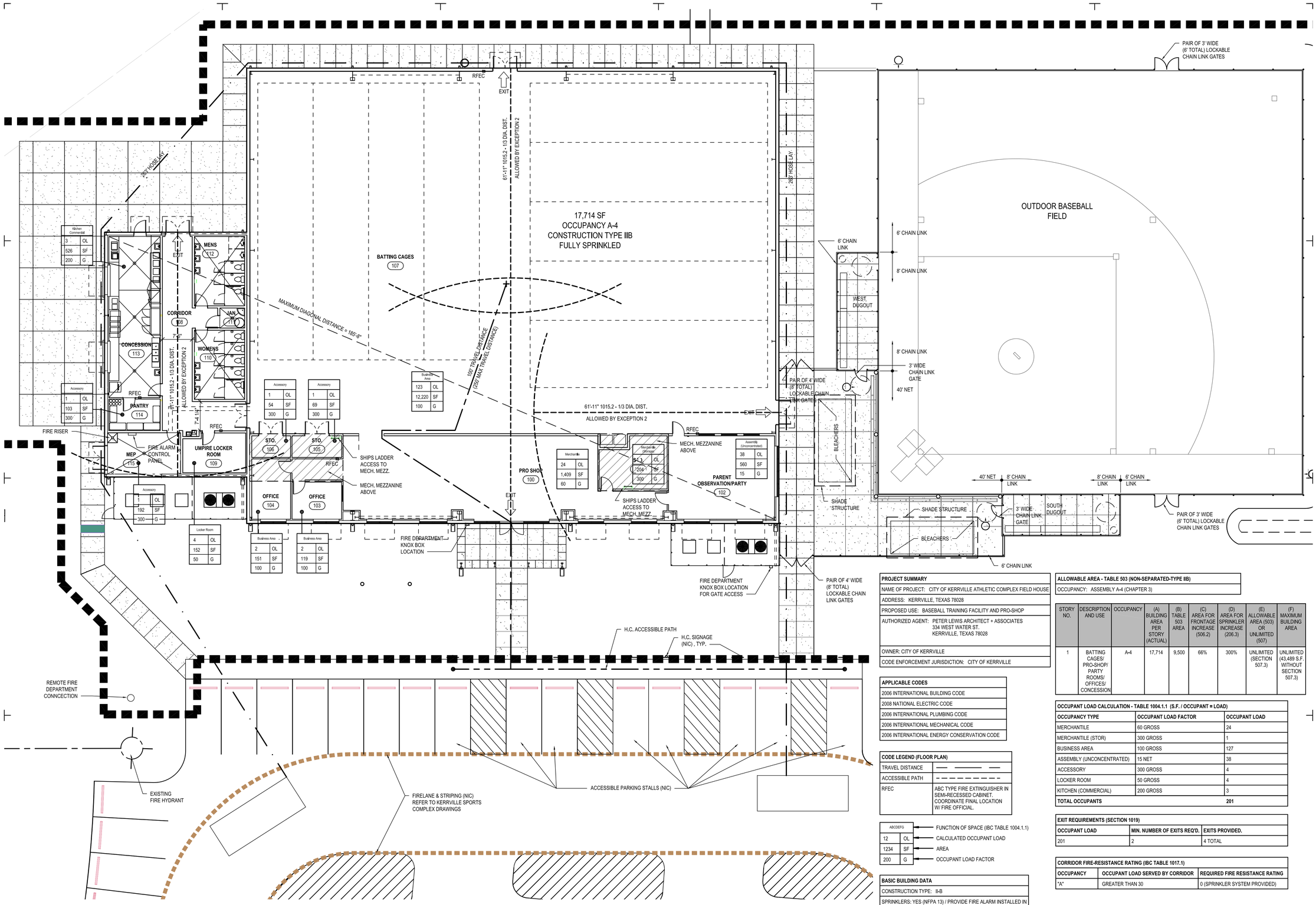

1 Code Compliance
Scale: 3/32" = 1'-0"

Kitchen Commercial	
3	OL
526	SF
200	G

Accessory	
1	OL
103	SF
300	G

Accessory	
1	OL
192	SF
300	G

Locker Room	
4	OL
152	SF
50	G

Accessory	
1	OL
54	SF
300	G

Accessory	
1	OL
69	SF
300	G

Business Area	
2	OL
151	SF
100	G

Business Area	
2	OL
119	SF
100	G

Boat Storage Area	
123	OL
12,220	SF
100	G

Merchantile	
24	OL
1,409	SF
60	G

Merchantile (Storage)	
54	OL
2204	SF
300	G

Assembly (Unconcentrated)	
38	OL
560	SF
15	G

PROJECT SUMMARY
NAME OF PROJECT: CITY OF KERRVILLE ATHLETIC COMPLEX FIELD HOUSE
ADDRESS: KERRVILLE, TEXAS 78028
PROPOSED USE: BASEBALL TRAINING FACILITY AND PRO-SHOP
AUTHORIZED AGENT: PETER LEWIS ARCHITECT + ASSOCIATES 334 WEST WATER ST. KERRVILLE, TEXAS 78028
OWNER: CITY OF KERRVILLE
CODE ENFORCEMENT JURISDICTION: CITY OF KERRVILLE

APPLICABLE CODES
2006 INTERNATIONAL BUILDING CODE
2008 NATIONAL ELECTRIC CODE
2006 INTERNATIONAL PLUMBING CODE
2006 INTERNATIONAL MECHANICAL CODE
2006 INTERNATIONAL ENERGY CONSERVATION CODE

CODE LEGEND (FLOOR PLAN)	
TRAVEL DISTANCE	
ACCESSIBLE PATH	
RFEC	ABC TYPE FIRE EXTINGUISHER IN SEMI-RECESSED CABINET. COORDINATE FINAL LOCATION W/ FIRE OFFICIAL.

ABCDEFG		
		FUNCTION OF SPACE (IBC TABLE 1004.1.1)
12	OL	CALCULATED OCCUPANT LOAD
1234	SF	AREA
200	G	OCCUPANT LOAD FACTOR

BASIC BUILDING DATA
CONSTRUCTION TYPE: II-B
SPRINKLERS: YES (NFPA 13) / PROVIDE FIRE ALARM INSTALLED IN ACCORDANCE WITH SECTION 907
BUILDING HEIGHT: 26'-6"
STORIES: 1
GROSS BUILDING AREA: 17,714 S.F.

ALLOWABLE AREA - TABLE 503 (NON-SEPARATED-TYPE IIB)
OCCUPANCY: ASSEMBLY A-4 (CHAPTER 3)

STORY NO.	DESCRIPTION AND USE	OCCUPANCY	(A) BUILDING AREA PER STORY (ACTUAL)	(B) TABLE 503 AREA	(C) AREA FOR FRONTAGE INCREASE (506.2)	(D) AREA FOR SPRINKLER INCREASE (206.3)	(E) ALLOWABLE AREA (503) OR UNLIMITED (507)	(F) MAXIMUM BUILDING AREA
1	BATTING CAGES/ PRO-SHOP/ PARTY ROOMS/ OFFICES/ CONCESSION	A-4	17,714	9,500	66%	300%	UNLIMITED (SECTION 507.3)	UNLIMITED (43,489 S.F. WITHOUT SECTION 507.3)

OCCUPANT LOAD CALCULATION - TABLE 1004.1.1 (S.F. / OCCUPANT = LOAD)		
OCCUPANCY TYPE	OCCUPANT LOAD FACTOR	OCCUPANT LOAD
MERCHANTILE	60 GROSS	24
MERCHANTILE (STOR)	300 GROSS	1
BUSINESS AREA	100 GROSS	127
ASSEMBLY (UNCONCENTRATED)	15 NET	38
ACCESSORY	300 GROSS	4
LOCKER ROOM	50 GROSS	4
KITCHEN (COMMERCIAL)	200 GROSS	3
TOTAL OCCUPANTS		201

EXIT REQUIREMENTS (SECTION 1019)		
OCCUPANT LOAD	MIN. NUMBER OF EXITS REQ'D.	EXITS PROVIDED.
201	2	4 TOTAL

CORRIDOR FIRE-RESISTANCE RATING (IBC TABLE 1017.1)		
OCCUPANCY	OCCUPANT LOAD SERVED BY CORRIDOR	REQUIRED FIRE RESISTANCE RATING
"A"	GREATER THAN 30	0 (SPRINKLER SYSTEM PROVIDED)

REVISIONS

NO.	DESCRIPTION	DATE

PETER LEWIS
ARCHITECT + ASSOCIATES
334 West Water Street
Kerrville, TX 78028
(830) 896-4220
(830) 896-4226
www.pwlarchitect.com

10/21/16

City of Kerrville Athletic Complex Field House

Kerrville, Texas

NOT PUBLISHED. ALL RIGHTS RESERVED BY THE ARCHITECT. DRAWINGS AND SPECIFICATIONS AS INSTRUMENTS OF SERVICE ARE AND SHALL REMAIN THE PROPERTY OF THE ARCHITECT. THEY SHALL NOT BE USED ON OTHER PROJECTS OR EXTENSIONS TO THIS PROJECT EXCEPT BY AGREEMENT IN WRITING AND WITH APPROPRIATE COMPENSATION TO THE ARCHITECT. CONTRACTORS SHALL VERIFY AND BE RESPONSIBLE FOR CONFIRMING AND CORRELATING DIMENSIONS AT JOB SITE. THE ARCHITECT WILL NOT BE RESPONSIBLE FOR CONSTRUCTION MEANS, METHODS, TECHNIQUES, SEQUENCES OR FOR SAFETY PRECAUTIONS AND PROGRAMS IN CONNECTION WITH THE PROJECT.

PROJECT NO. 20-1605
DATE 10/21/16

Code Compliance

SHEET NUMBER
G1.3

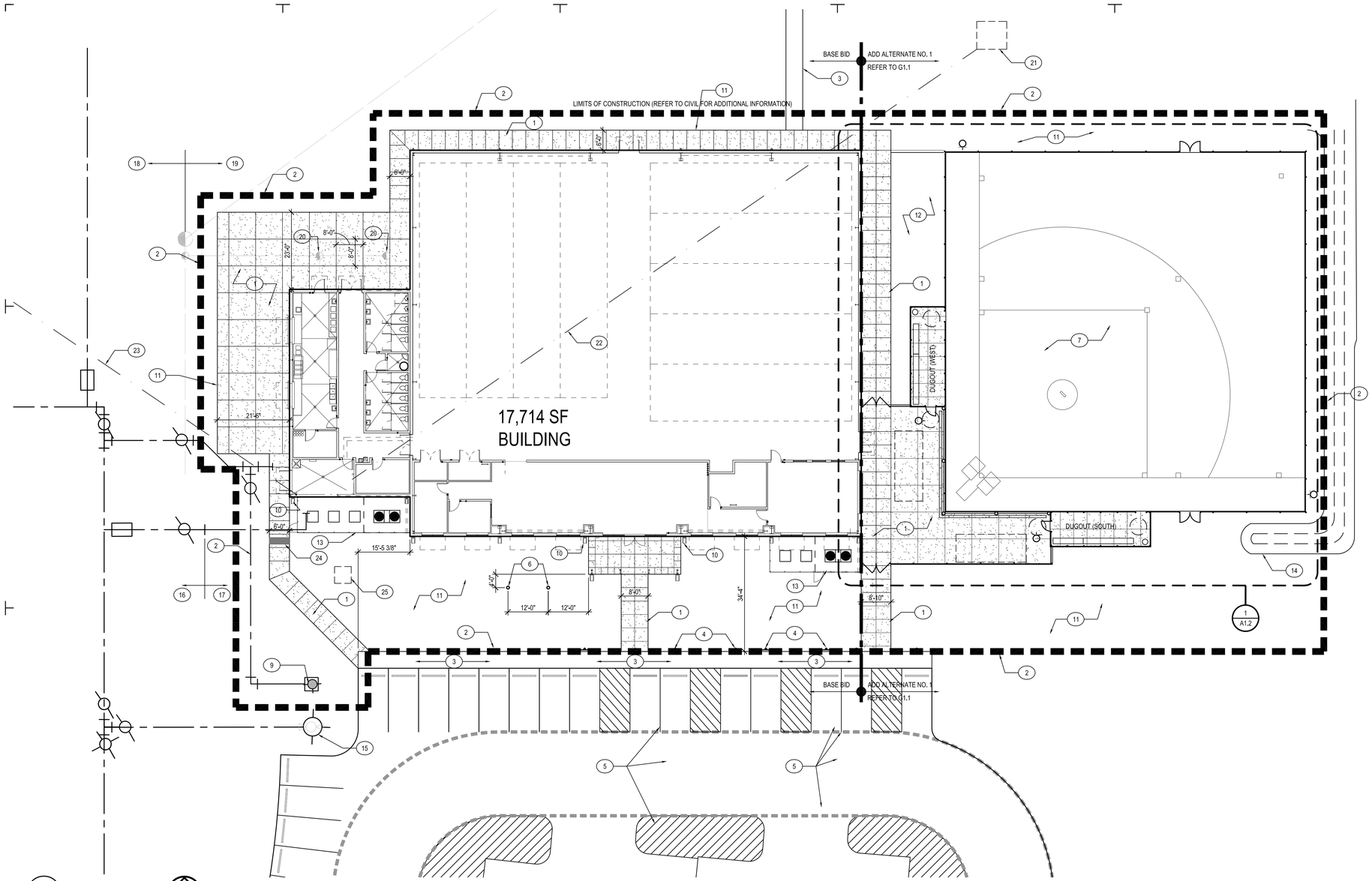

1 Site Plan
Scale: 1/16" = 1'-0"

TRUE

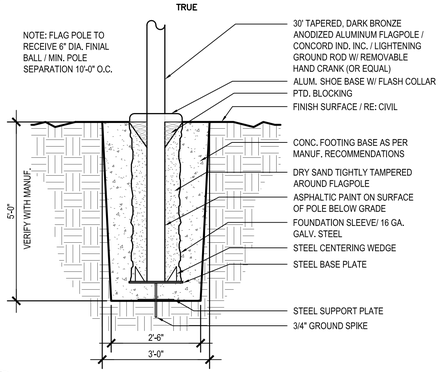

2 Flag Pole Detail
Scale: 1/2" = 1'-0"

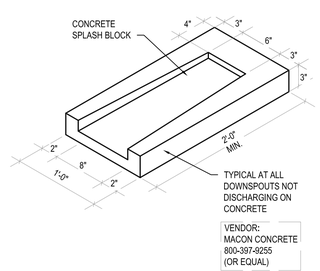

3 Splash Block Detail
Scale: 12" = 1'-0"

Key Notes

1. PAVING RE: CIVIL
2. LIMITS OF CONSTRUCTION (TYP.)
3. CONC. SIDEWALK. NOT IN CONTRACT. CONTRACTOR TO COORDINATE ALL FLATWORK CONNECTIONS W/ SPORTS COMPLEX GENERAL CONTRACTOR. (TYP.)
4. H.C. PARKING SIGNAGE. NOT IN CONTRACT. (TYP.)
5. PARKING ROAD, PAVING, & STRIPING. NOT IN CONTRACT. (TYP.)
6. 30' FLAG POLES. RE: 2/A1.1
7. ARTIFICIAL TURF OVER COMPACTED BASE. RE: CIVIL
8. FIRE HYDRANT. RE: CIVIL
9. REMOTE FIRE DEPARTMENT CONNECTION. REFER TO CIVIL & MEP FOR EXACT LOCATION & ADDITIONAL INFORMATION.
10. SPLASH BLOCK. RE: 3/A1.1 (TYP.)
11. HYDROMULCH. COORDINATE W/ OWNER & ATHLETIC COMPLEX GENERAL CONTRACTOR WITH EXACT SPECIES OF SEEDING PRIOR TO INSTALLATION.
12. DECOMPOSED GRANITE. RE: CIVIL
13. MECHANICAL YARD AND FENCING. RE: MEP.
14. 9' WIDE INTERCEPTOR CHANNEL. RE: CIVIL.
15. EXISTING FIRE HYDRANT. RE: CIVIL.
16. EXISTING WATER LINE. RE: CIVIL.
17. PROPOSE CONNECTION TO NEW WATER LINE. RE: CIVIL/MEP.
18. EXISTING SEWER LINE. RE: CIVIL.
19. PROPOSED SEWER LINE. RE: CIVIL/MEP.
20. CLEAN OUT. RE: MEP.
21. EXISTING LOCATION OF ELECTRICAL TRANSFORMER. VERIFY EXACT LOCATION IN FIELD. RE: CIVIL/MEP.
22. UNDERGROUND SECONDARY ELECTRICAL. RE: ELECTRICAL.
23. UNDERGROUND COMMUNICATIONS. RE: ELECTRICAL.
24. SIDEWALK FLUME. RE: CIVIL.
25. CONDENSATE DRY WELL. RE: PLUMBING.

REVISIONS

NO.	DESCRIPTION	DATE

PETER LEWIS
ARCHITECT + ASSOCIATES
334 West Water Street
Kerrville, TX 78028
(830) 896-4220
(830) 896-4226
www.pwlarchitect.com

REGISTERED ARCHITECT PETER W. LEWIS 08295 STATE OF TEXAS

10/21/16

City of Kerrville Athletic Complex Field House

Kerrville, Texas

NOT PUBLISHED. ALL RIGHTS RESERVED BY THE ARCHITECT. DRAWINGS AND SPECIFICATIONS AS INSTRUMENTS OF SERVICE ARE AND SHALL REMAIN THE PROPERTY OF THE ARCHITECT. THEY SHALL NOT BE USED ON OTHER PROJECTS OR EXTENSIONS TO THIS PROJECT EXCEPT BY AGREEMENT IN WRITING AND WITH APPROPRIATE COMPENSATION TO THE ARCHITECT. CONTRACTOR IS RESPONSIBLE FOR THE CONSTRUCTION MEANS, METHODS, TECHNIQUES, SEQUENCES AND PROCEDURES, NOT ISE RESPONSIBLE FOR CONSTRUCTION MEANS, METHODS, TECHNIQUES, SEQUENCES OR FOR SAFETY PRECAUTIONS AND PROGRAMS IN CONNECTION WITH THE PROJECT.

PROJECT NO.	DATE
20-1605	10/21/16

Site Plan

SHEET NUMBER

A1.1

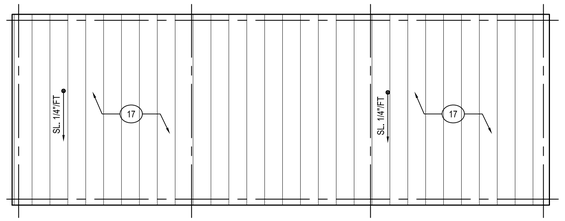

4 Roof Plan @ Dugout (TYP.)
Scale: 1/4" = 1'-0"

TRUE

General Notes

G1. UNLESS NOTED OTHERWISE, ALL CHAIN LINK FENCING IS TO BE 6'-0" TALL. REFER TO CIVIL FOR ADDITIONAL INFORMATION.
G2. BACKSTOP NETTING INFORMATION IS SHOWN SCHEMATIC IN NATURE, AND ARE MEANT TO CONVEY THE GENERAL LAY OUT OF THE NETTING. DESIGN AN CONSTRUCTION ARE TO BE IN CONFORMANCE WITH APPLICABLE CODES, AND IS THE RESPONSIBILITY OF THE BACKSTOP NETTING VENDOR. FIELD VERIFY FOR FINAL DIMENSIONS REQUIRED.
G3. FIELD LIGHTING TO BE RELOCATED FROM EXISTING "HILL COUNTRY CRUSH SOCCER ACADEMY." REFER TO ELECTRICAL FOR ADDITIONAL INFORMATION. COORDINATE WITH OWNER.

Legend

CHAIN LINK FENCE/ BACKSTOP NETTING. REFER TO PLANS

FIELD LIGHTING, RE: ELECTRICAL

Backstop Netting Gen. Notes

BASEBALL FIELD NETTING
BASEBALL FIELD NETTING SHALL BE PROVIDED AND INSTALLED BY THE FOLLOWING COMPANY, OR APPROVED EQUAL:

AMERICA'S NATIONWIDE NETTING, INC., D.B.A. NETS OF TEXAS
P.O. BOX 1776
CYPRESS, TX 77410
800-335-9289 281-374-0506
800-335-9290 FAX: 281.374.0532
WWW.NETSOFTEXAS.COM
INFO@NETSOFTEXAS.COM

REFER TO DRAWING SHEET A1.0 AND A1.1 FOR BASEBALL FIELDS, AND SCHEMATIC DIAGRAM OF NETTING.
TECHNICAL SPECIFICATIONS: NETTING AND HEAVY-DUTY INSTALLATION HARDWARE

NETTING:
TYPE: # 36 DUPONT KNOTTED NYLON OFFERING SUBSTANTIALLY LESS WIND RESISTANCE THAN KNOTLESS NETTING,
WIND LOAD SURFACE AREA - 9%
SIZE: 1 3/4" SQUARE MESH
TENSILE STRENGTH: 350 LBS. PER MESH
BURST STRENGTH: 1400 PER MESH
WARRANTY: 1 YEAR MANUFACTURER WARRANTY
PERIMETER ROPE:
TYPE: BLACK NYLON: PRESHRUNK, DOUBLE-TREATED FOR EXTRA U.V. PROTECTION
SIZE: 3/8 DIAMETER
TENSILE STRENGTH: 4000LBS MINIMUM

CABLE:
TYPE: 3/8" AIRCRAFT CABLE- USED AT TOP AND BOTTOM OF POLES
TENSILE STRENGTH: 15,000
CABLE CLIPS: GALVANIZED- MINIMUM 2 EACH PER CONNECTION
CABLE SHACKLES: 1/4" GALVANIZED; ATTACHED 2' O.C. TO PERIMETER CABLE AND RIB CABLE. BREAKING STRENGTH 1,400 # MINIMUM.
CABLE TURN BUCKLES: 3/4" GALVANIZED X 12"
CABLE EYE BOLTS: 3/4" GALVANIZED X 12"

MISCELLANEOUS BASEBALL EQUIPMENT AND ACCESSORIES

TAG	EQUIPMENT	DESCRIPTION	MODEL NO.
BB1	BASES, PLUGS	MAGNETIC BASE WITH COVERS THAT RELEASE, DISENGAGE TO HELP PREVENT PLAYER INJURIES WHILE SLIDING; PROVIDE 9 TOTAL WITH BASE ANCHORS & PLUGS FOR EACH BASE PROVIDE CAP FOR EACH BASE WHEN NOT IN USE.	-
BB2	HOME PLATE	---	-
BB3	PITCHERS RUBBER/ MOUND	PORTABLE. OWNER PROVIDED AND INSTALLED.	-
BB4	FENCE CAP	RECTANGULAR SAFETY TOP CAP FOR OUTFIELD FENCING, YELLOW.	SKU# 1273854
BB5	DUGOUT BENCH	ANNODIZED ALUMINUM BENCH, GALVANIZED FRAME, WITH BACK, BY STURDISTEEL, OR EQUAL, LENGTHS AS INDICATED ON PLANS. PROVIDE PERMANENT MOUNTING TO CONCRETE FLOOR.	-
BB6	BLEACHERS	21' LONG, 4 ROW LOW RISE ALUMINUM BLEACHERS, TOP SEAT 30" OR LESS., BY STURDISTEEL OR EQUAL. PERMANENT MOUNTING TO CONCRETE FLATWORK REQUIRED. 2"x10" SINGLE FOOTBOARDS, 2"x12" SINGLE SEATBOARDS. NO AISLES, SIDE OR BACKRAIL.	-
BB7	HELMET RACKS	STACKMASTER BATTING HELMET STORAGE RACKS, BY JAYPRO SPORTS. HOLDS UP TO TWELVE HELMETS, GALVANIZED STEEL FRAME, ANCHOR TO GROUND	-
BB8	BATTING RACKS	STEEL FINISHED BAT RACK, 30" LONG, HOLDS 10 BATS	SKU# 1159622
BB9	WINDSCREEN FOR DUGOUTS	TUFFY - 174 WINDSCREEN, 6' HIGH, BLACK COLOR. PROVIDE ON BACK AND TWO SIDES OF DUGOUT.	SKU# 1285598
BB10	FOUL POLES	PROFESSIONAL FOUL POLES, 3 1/2" DIAMETER, PREFINISHED STEEL POLE, 20' ABOVE GROUND, 12' WING, 2 PER FIELD. MANUFACTURED BY SPORTS SUPPLY GROUP	SKU# BSFOUL
BB11	BLEACHER COVERS	TENSILE SHADE STRUCTURE w/ STRUCTURAL STEEL SUPPORTS (POWDER COAT FINISH.) BASIS OF DESIGN: TENSOSHADE 11'x22'x10' HT. CANTILEVER CURVED SHADE STRUCTURE. FINAL COLOR FOR FABRIC AND POWDER COAT FINISH TO BE DETERMINED FROM MANUFACTURER STANDARD COLORS	

GENERAL NOTE:
1. PRODUCTS ARE LISTED BY MANUFACTURER OR APPROVED EQUAL: MOST EQUIPMENT IS AVAILABLE THROUGH ATHLETIC CONNECTION

Key Notes

1. ARTIFICIAL TURF OVER COMPACTED BASE. RE: CIVIL
2. CONCRETE CURB, TOP TO BE FLUSH W/ ARTIFICIAL TURF & ADJACENT CONC. PAVING. RE: CIVIL (TYP.)
3. CONCRETE SIDEWALK/ PAVING. RE: CIVIL
4. CONCRETE FOUNDATION @ DUGOUTS. RE: STRUCTURAL
5. 3' WIDE CLEAR OPENING @ GATE.
6. BACKSTOP NETTING SUPPORT POLE, SIZE & LOCATION ARE SHOWN SCHEMATIC IN NATURE. REFER TO GENERAL NOTES FOR ADDITIONAL INFORMATION
7. PIPE RAILING. (PTD.) REFER TO DETAIL 4/A1.3
8. NOT USED
9. CONCRETE SCORING. (TYP.) RE: CIVIL/STRUCTURAL.
10. FIELD LIGHTING. RE: ELECTRICAL
11. PAIR OF 4' WIDE (8' TOTAL) CHAIN LINK GATE. PROVIDE LATCH & THROW ROD.
12. 3' WIDE CHAIN LINK GATE. PROVIDE LATCH.
13. NOT USED
14. 3" DIA. GALV. STL PIPE COLUMN. CHAIN LINK TO BE MOUNTED AT THE OUTSIDE.
15. CHAIN LINK POST. AS REQUIRED. (TYP.)
16. ALUMINUM BLEACHERS.
17. 26 GA. PRE-FINISHED METAL ROOF. "R-PANEL" BY MBCI OR APPROVED EQUAL.
18. PAIR OF 3' WIDE (6' TOTAL) CHAIN LINK GATE. PROVIDE LATCH & THROW ROD.
19. NOT USED.
20. DECOMPOSED GRANITE. RE: CIVIL
21. HYDROMULCH. RE: CIVIL
22. CONCRETE CURB. RE: CIVIL
23. PERFORATED DRAIN PIPE BELOW FIELD. RE: CIVIL
24. TENSILE SHADE STRUCTURE.
25. PROVIDE CONC. LANDING IN BASE BID.

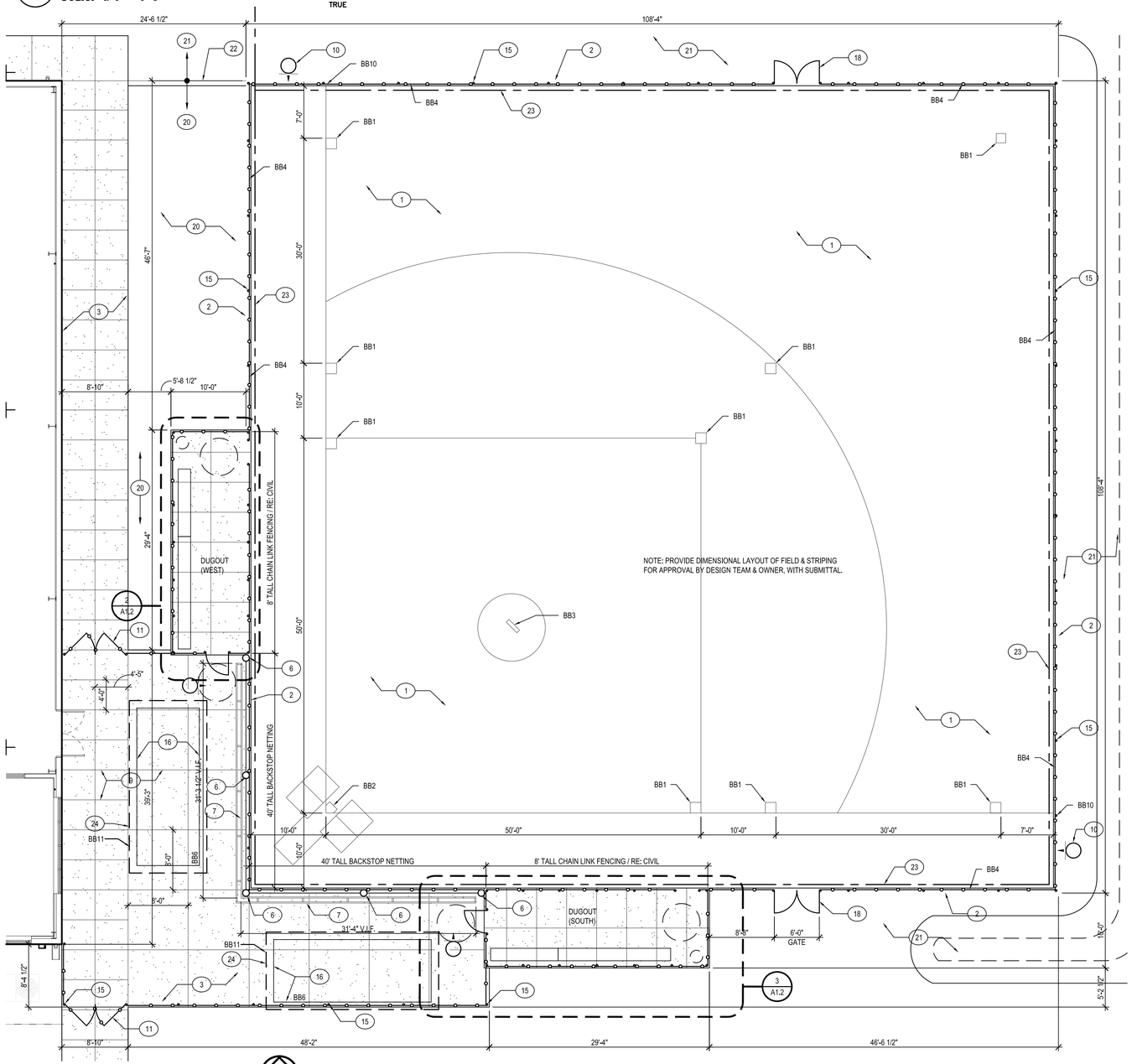

1 Enlarged Field Plan
Scale: 1/8" = 1'-0"

TRUE

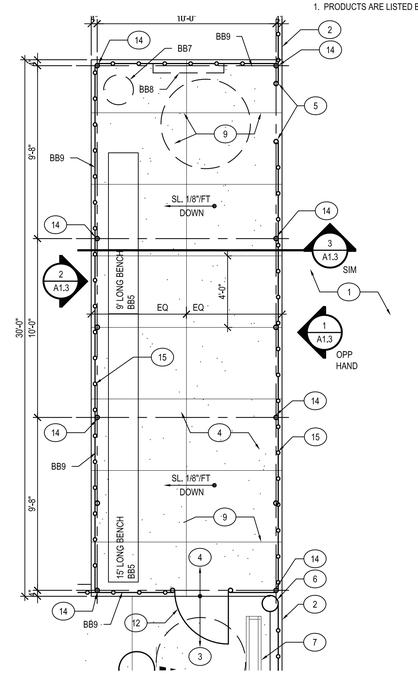

2 Dugout Plan (West)
Scale: 1/4" = 1'-0"

TRUE

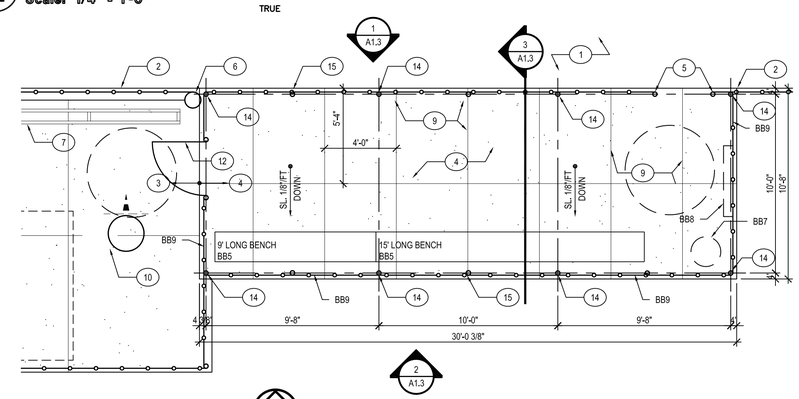

3 Dugout Plan (South)
Scale: 1/4" = 1'-0"

TRUE

REVISIONS

NO.	DESCRIPTION	DATE

PETER LEWIS
ARCHITECT + ASSOCIATES
334 West Water Street
Kerrville, TX 78028
(830) 896-4220
(830) 896-4226
www.pwlarchitect.com

10/21/16

City of Kerrville Athletic Complex Field House
Kerrville, Texas

NOT PUBLISHED. ALL RIGHTS RESERVED BY THE ARCHITECT. DRAWINGS AND SPECIFICATIONS AS INSTRUMENTS OF SERVICE ARE AND SHALL REMAIN THE PROPERTY OF THE ARCHITECT. THEY SHALL NOT BE USED ON OTHER PROJECTS OR EXTENSIONS TO THIS PROJECT EXCEPT BY AGREEMENT IN WRITING AND WITH APPROPRIATE COMPENSATION TO THE ARCHITECT. CONTRACTORS SHALL VERIFY AND BE RESPONSIBLE FOR CONFIRMING AND CORRELATING DIMENSIONS AT JOB SITE. THE ARCHITECT WILL NOT BE RESPONSIBLE FOR CONSTRUCTION MEANS, METHODS, TECHNIQUES, SEQUENCES OR FOR SAFETY PRECAUTIONS AND PROGRAMS IN CONNECTION WITH THE PROJECT.

PROJECT NO.	DATE
20-1605	10/21/16

Field Plans (ADD ALTERNATE #1)

SHEET NUMBER

A1.2

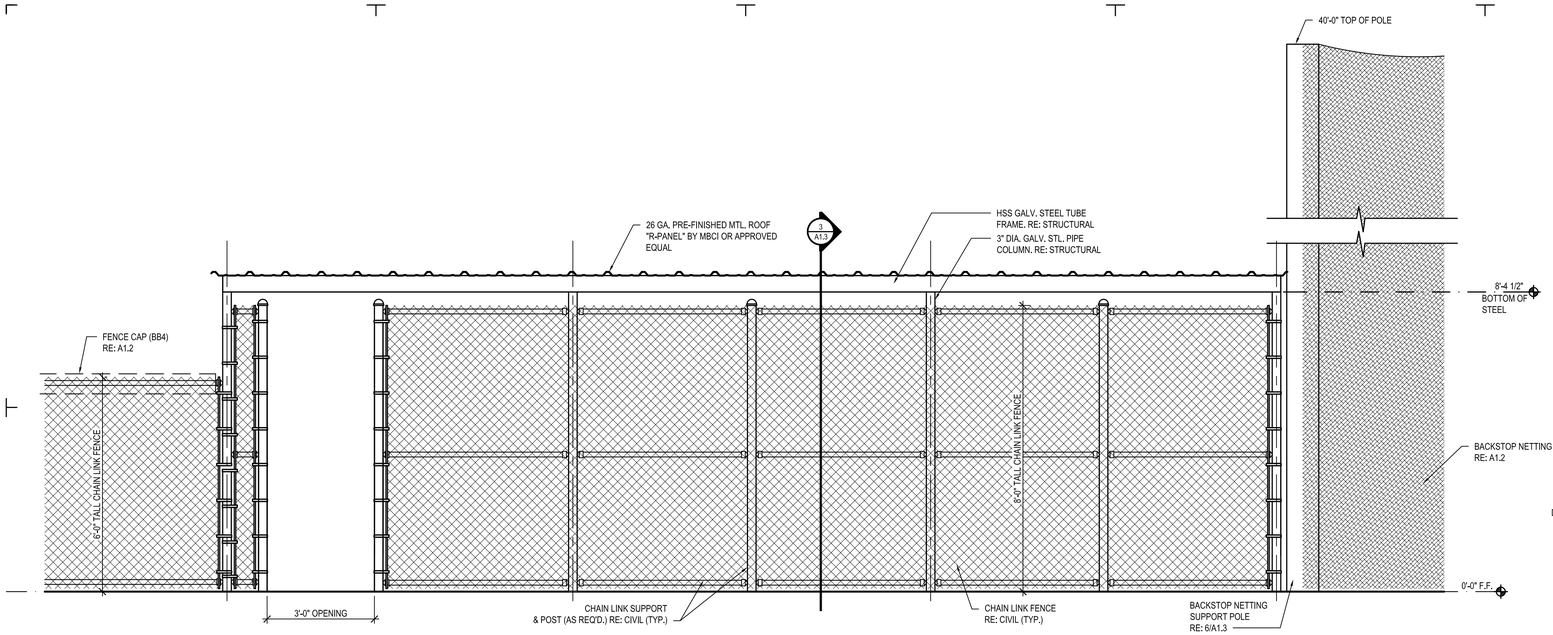

1 Dugout Elevation
Scale: 1/2" = 1'-0"

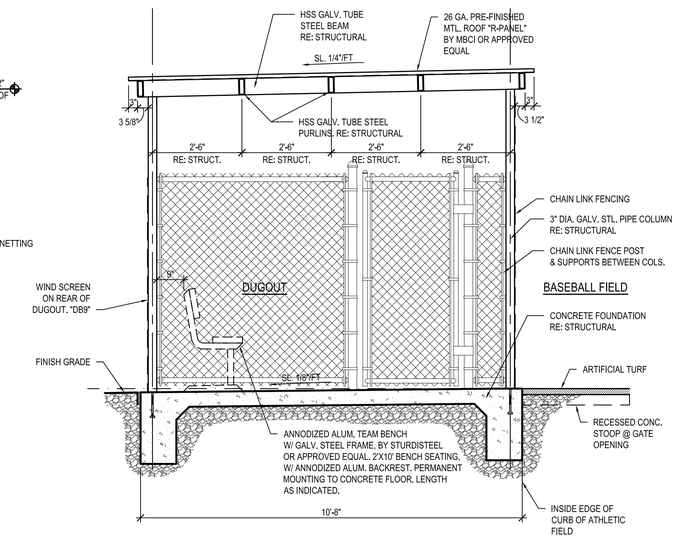

3 Dugout Section
Scale: 1/2" = 1'-0"

General Notes

G1. UNLESS NOTED OTHERWISE, ALL CHAIN LINK FENCING IS TO BE 6'-0" TALL. REFER TO CIVIL FOR ADDITIONAL INFORMATION.
G2. BACKSTOP NETTING INFORMATION IS SHOWN SCHEMATIC IN NATURE, AND ARE MEANT TO CONVEY THE GENERAL LAY OUT OF THE NETTING. DESIGN AN CONSTRUCTION ARE TO BE IN CONFORMANCE WITH APPLICABLE CODES, AND IS THE RESPONSIBILITY OF THE BACKSTOP NETTING VENDOR. FIELD VERIFY FOR FINAL DIMENSIONS REQUIRED.

REVISIONS

NO.	DESCRIPTION	DATE

PETER LEWIS
ARCHITECT + ASSOCIATES
334 West Water Street
Kerrville, TX 78028
(830) 896-4220
(830) 896-4226
www.pwlarchitect.com

REGISTERED PETER W. LEWIS ARCHITECT 08295 STATE OF TEXAS

10/21/16

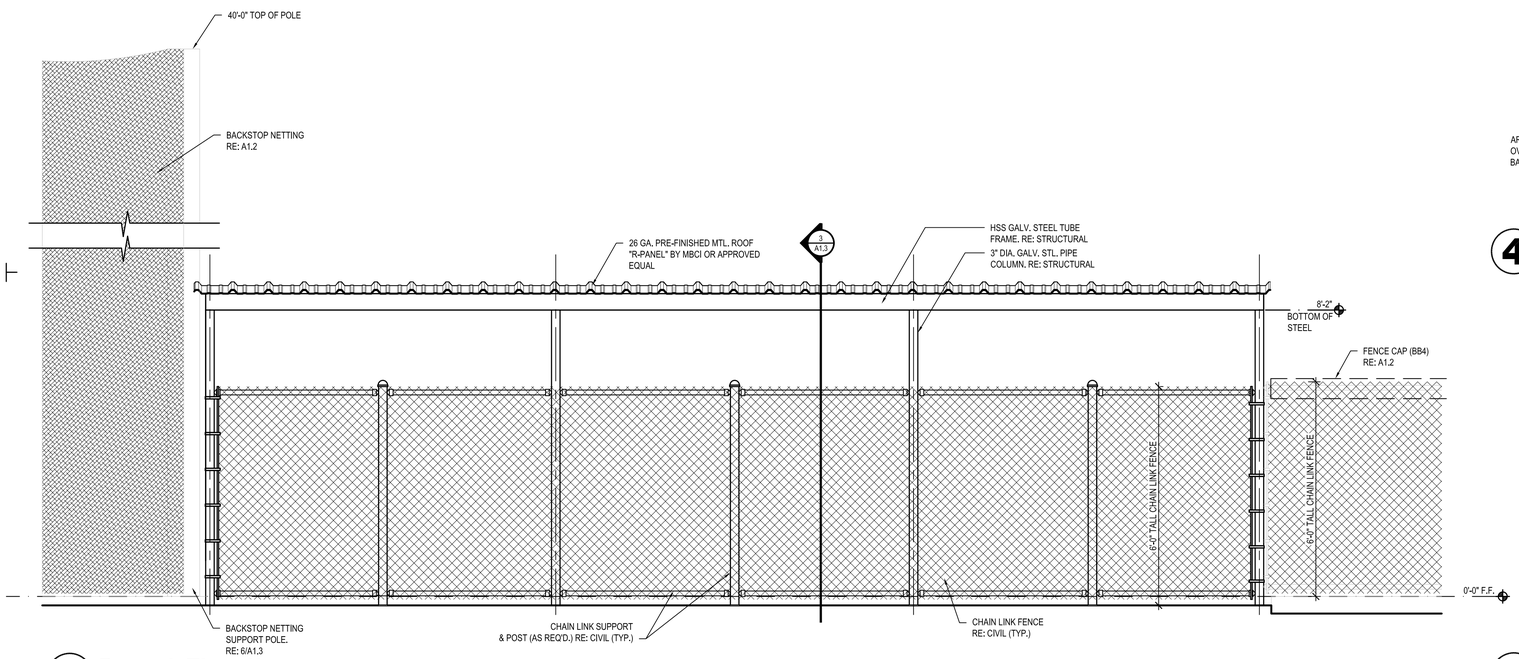

2 Dugout Elevation
Scale: 1/2" = 1'-0"

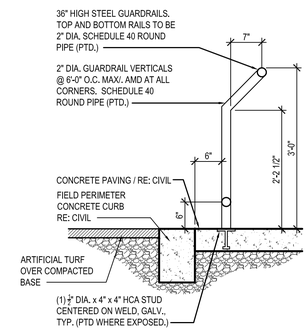

4 Railing Detail
Scale: 3/4" = 1'-0"

5 Not Used
Scale: 3/4" = 1'-0"

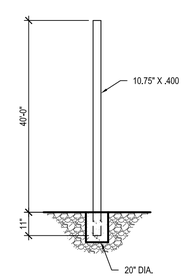

NOTE: POLES TO BE SET IN 3,000 PSI CONCRETE

6 Schematic Backstop Netting Posts
Scale: NTS

City of Kerrville Athletic Complex Field House

Kerrville, Texas

NOT PUBLISHED. ALL RIGHTS RESERVED BY THE ARCHITECT. DRAWINGS AND SPECIFICATIONS AS INSTRUMENTS OF SERVICE ARE AND SHALL REMAIN THE PROPERTY OF THE ARCHITECT. THEY SHALL NOT BE USED ON OTHER PROJECTS OR EXTENSIONS TO THIS PROJECT EXCEPT BY AGREEMENT IN WRITING AND WITH APPROPRIATE COMPENSATION TO THE ARCHITECT. CONTRACTOR IS RESPONSIBLE FOR THE CONFIRMING AND CORRELATING DIMENSIONS AT JOB SITE. THE ARCHITECT WILL NOT BE RESPONSIBLE FOR CONSTRUCTION MEANS, METHODS, TECHNIQUES, SEQUENCES OR FOR SAFETY PRECAUTIONS AND PROGRAMS IN CONNECTION WITH THE PROJECT.

PROJECT NO.	DATE
20-1605	10/21/16

Site Details (ADD ALTERNATE #1)

SHEET NUMBER

A1.3

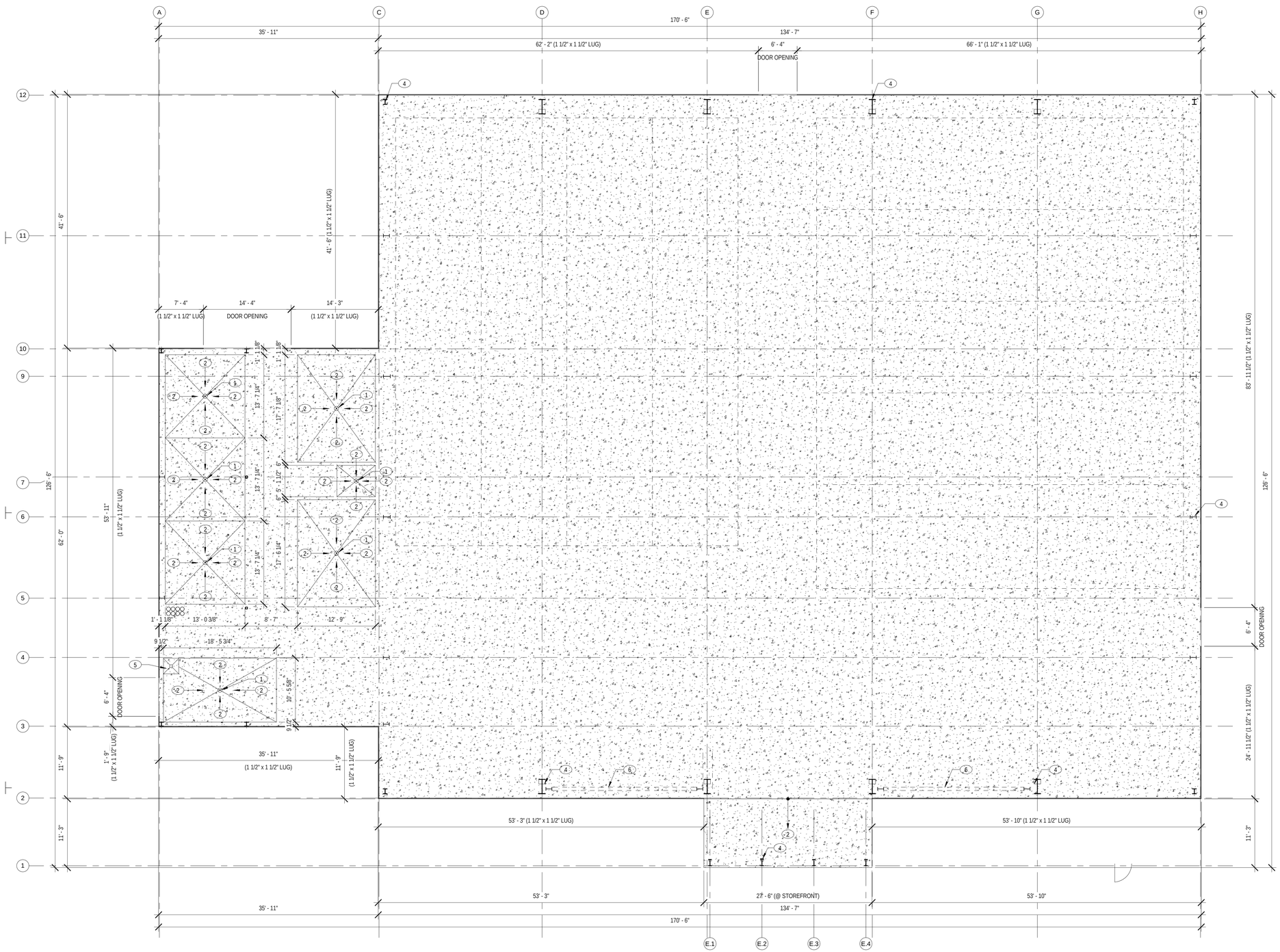

Foundation Dimensional Control Plan

1 1/8" = 1'-0"

10/26/2016 9:23:36 AM

GENERAL NOTES:

1. REFER TO STRUCTURAL FOUNDATION DRAWINGS FOR ADDITIONAL INFORMATION.

KEY NOTES:

1. FLOOR DRAIN. RE: PLUMBING
2. SLOPE SLAB TO DRAIN. 1/4": FT. MAX.
3. NOT USED.
4. PRE-ENGINEERED METAL BUILDING FRAME. RE: STRUCTURAL
5. FIRE RISER. RE: MEP
6. PORTAL FRAME. RE: STRUCTURAL

REVISIONS

NO.	DESCRIPTION	DATE

PETER LEWIS
ARCHITECT + ASSOCIATES

334 West Water Street
Kerrville, TX 78028
(830) 896-4220
(830) 896-4226
www.pwlarchitect.com

REGISTERED ARCHITECT PETER W. LEWIS 18259 STATE OF TEXAS

10/21/16

CITY OF KERRVILLE 1889 TEXAS

City of Kerrville Athletic Complex Field House

Kerrville, Texas

NOT PUBLISHED. ALL RIGHTS RESERVED BY THE ARCHITECT. DRAWINGS AND SPECIFICATIONS AS INSTRUMENTS OF SERVICE ARE AND SHALL REMAIN THE PROPERTY OF THE ARCHITECT. THEY SHALL NOT BE USED ON OTHER PROJECTS OR EXTENSIONS TO THIS PROJECT, EXCEPT BY AGREEMENT IN WRITING AND APPROPRIATE COMPENSATION TO THE ARCHITECT. CONTRACTOR IS RESPONSIBLE FOR THE CONFIRMING AND CORRELATING DIMENSIONS AT JOB SITE. THE ARCHITECT WILL NOT BE RESPONSIBLE FOR CONSTRUCTION MEANS, METHODS, TECHNIQUES, SEQUENCES OR FOR SAFETY PRECAUTIONS AND PROGRAMS IN CONNECTION WITH THE PROJECT.

PROJECT NO.	DATE
20-1605	10/21/16

Foundation Dimensional Control Plan

SHEET NUMBER

A2.1

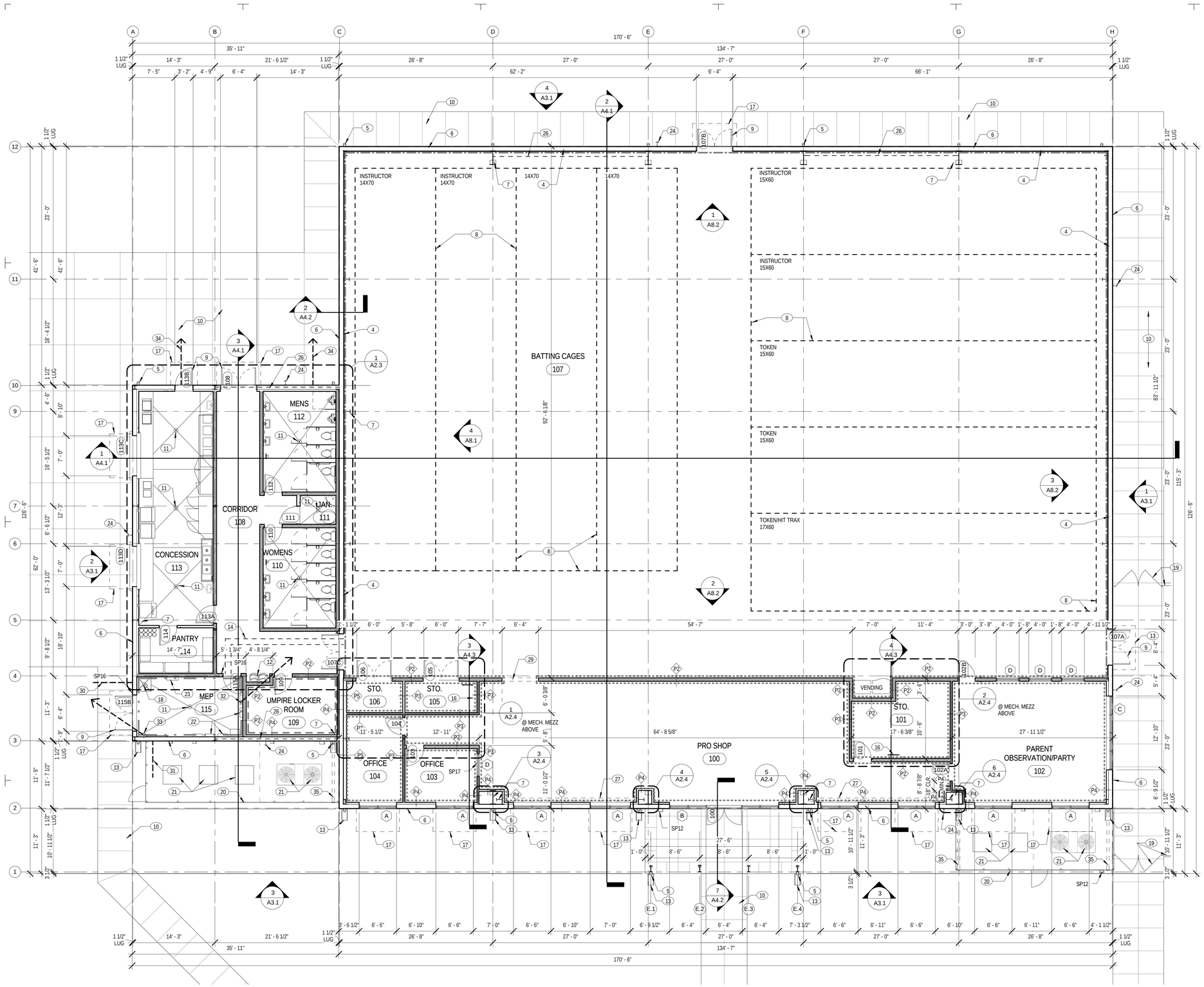

FLOOR PLAN GENERAL NOTES:

1. ALL DIMENSIONS ARE FROM CENTERLINE OF COLUMN, EDGE OF CONCRETE OR MASONRY, OR FACE OF STUD WALLS, UNLESS OTHER WISE NOTED.

2. THE CONTRACTOR IS TO PROVIDE TREATED WOOD BLOCKING AS NEEDED FOR ALL WALL MOUNTED ITEMS OR ACCESSORIES.

3. PRIOR TO COMMENCEMENT OF WORK, THE CONTRACTOR SHALL FIELD VERIFY ALL EXISTING CONDITIONS, AND PLAN DIMENSIONS PRIOR TO THE START OF ANY CONSTRUCTION AND OR FABRICATION. IT IS THE CONTRACTORS RESPONSIBILITY TO NOTIFY THE ARCHITECT, IN WRITING OF ANY DISCREPANCIES FOUND.

4. ALL DOORS ARE TO BE 4" FROM FACE OF ADJACENT WALL FINISH OF PERPENDICULAR WALL TO THE EDGE OF THE DOOR FRAME, UNLESS OTHERWISE NOTED.

5. REFER TO TEXAS ACCESSIBILITY STANDARDS (T.A.S.) FOR ALL MOUNTING HEIGHTS, DOOR CLEARANCES, ETC.

6. PRIOR TO THE FABRICATION OF MILLWORK OR THE ORDERING OF ANY SPECIALTY ITEMS, THE CONTRACTOR SHALL VERIFY ALL DIMENSIONS TO ENSURE A PROPER FIT.

7. MINIMUM "R" RATING OF NEW CONSTRUCTION OF ENVELOPE SHALL COMPLY WITH THE FOLLOWING: ROOF: R-30, WALLS R-19.

8. REFER TO EXTERIOR FINISH SCHEDULE FOR IDENTIFICATION OF ALL EXTERIOR FINISH ITEMS.

9. REFER TO SHEETS A2.2 FOR WALL TYPES.

10. REFER TO SHEET A2.2 FOR ACCESSORY SCHEDULE (SP) LEGEND.

WALL FINISH LEGEND:

- INTERIOR METAL WALL LINER PANEL. MBCI IL-240-0 24" X 1 1/2" 24 GA. OR APPROVED EQ. EXTENDED TO 15'-0" A.F.F. RE: FINISH SCHEDULE.
- 5/8" TYPE "X" GYPSUM BOARD WALL. TAPE AND FLOAT ONLY. FINAL TEXTURE, PRIME AND PAINT FINISH NOT IN CONTRACT
- 5/8" TYPE "X" GYPSUM BOARD. TAPE, FLOAT, TEXTURE, PRIME & PAINT. REFER TO SPECIFICATIONS & FINISH SCHEDULE.
- 3/4" UNFINISHED FIRE RESISTANT PLYWOOD FROM F.F. TO 8'-0" A.F.F.
- ACOUSTICAL BATT INSULATION.

KEY NOTES:

1. NOT USED.
2. EDGE OF CONCRETE FOUNDATION. RE: STRUCTURAL.
3. NOT USED.
4. PRE-FINISHED INTERIOR METAL PANEL. RE: FINISH SCHEDULE.
5. PRE-FINISHED METAL DOWNSPOUT. FINAL SIZE & GAUGE TO BE DETERMINED BY PEMB MANUFACTURER. (TYP.)
6. PRE-FINISHED EXTERIOR METAL WALL PANEL OVER 8" PRE-ENGINEERED METAL GIRTS. (TYP.)
7. PRE-ENGINEERED METAL COLUMN, RE: STRUCTURAL. (TYP.)
8. LOCATION OF BATTING CAGE/ NETTING, TYP. (NOT IN CONTRACT)
9. INSULATED HOLLOW METAL DOOR & FRAME. (PTD.)
10. CONCRETE PAVING. RE: CIVIL
11. FLOOR DRAIN. RE: PLUMBING. SLOPE FLOOR 1/4":FT MAXIMUM (TYP.)
12. HI-LO HANDICAPPED ACCESSIBLE WATER COOLER. RE: MEP.
13. CONCRETE SPLASH BLOCK AT DOWNSPOUT. RE: 3/A1.0.
14. PROVIDE CONDUIT FROM MEP 115 TO BATTING CAGES 107 w/ PULLSTRING. REFER TO ELECTRICAL FOR CONDUIT SIZE AND AMMOUNT.
15. NOT USED.
16. MECHANICAL MEZZANINE ACCESS LADDER.
17. LINE OF CANOPY/AWNINGS ABOVE. RE: ROOF PLAN
18. FIRE SPRINKLER RISER. RE: SPRINKLER
19. CHAINLINK FENCE & GATE. REFER TO A1.1
20. 4' HIGH CHAIN LINK FENCE, W/ FULL HEIGHT WIND SCREEN TO MATCH DUGOUTS. PROVIDE 3' WIDE GATE & LATCH W/ LOCK. REFER TO MECH. FOR REQ'D CLEARANCES.
21. CONDENSING UNIT. RE: MECH
22. ELEC. PANELS. RE: ELECTRICAL.
23. FIRE ALARM CONTROL PANEL. RE: ELEC.
24. HOSE BIBB. RE: PLUMBING.
25. NOT USED.
26. "X-BRACING" RE: STRUCTURAL.
27. PORTAL FRAME. RE: STRUCTURAL.
28. NOT USED.
29. 8' TALL CASED OPENING.
30. FIRE SPRINKLER SERVICE LINE. RE: CIVIL.
31. DOMESTIC WATER LINE. RE: CIVIL.
32. SECONDARY ELECTRICAL SERVICE. RE: ELECTRICAL.
33. COMMUNICATION SERVICE. RE: ELECTRICAL.
34. SANITARY SEWER SERVICE. RE: CIVIL.
35. PROVIDE DOWNSPOUT EXTENSION TO OUTSIDE OF MECHANICAL YARD SCREEN WALL.

REVISIONS

NO.	DESCRIPTION	DATE

PETER LEWIS
ARCHITECT + ASSOCIATES
334 West Water Street
Kerrville, TX 78028
(830) 896-4220
(830) 896-4226
www.pwlarchitect.com

10/21/16

City of Kerrville Athletic Complex Field House

Kerrville, Texas

NOT PUBLISHED. ALL RIGHTS RESERVED BY THE ARCHITECT. DRAWINGS AND SPECIFICATIONS AS INSTRUMENTS OF SERVICE ARE AND SHALL REMAIN THE PROPERTY OF THE ARCHITECT. THEY SHALL NOT BE USED ON OTHER PROJECTS OR EXTENSIONS TO THIS PROJECT, EXCEPT BY AGREEMENT IN WRITING AND APPROPRIATE COMPENSATION TO THE ARCHITECT. CONTRACTOR IS RESPONSIBLE FOR THE CONFIRMING AND CORRELATING DIMENSIONS AT JOB SITE. THE ARCHITECT WILL NOT BE RESPONSIBLE FOR CONSTRUCTION MEANS, METHODS, TECHNIQUES, SEQUENCES OR FOR SAFETY PRECAUTIONS AND PROGRAMS IN CONNECTION WITH THE PROJECT.

PROJECT NO.	DATE
20-1605	10/21/16

Floor Plan

SHEET NUMBER

A2.2

10/26/2016 9:23:40 AM

1 Floor Plan - Overall

1/8" = 1'-0"

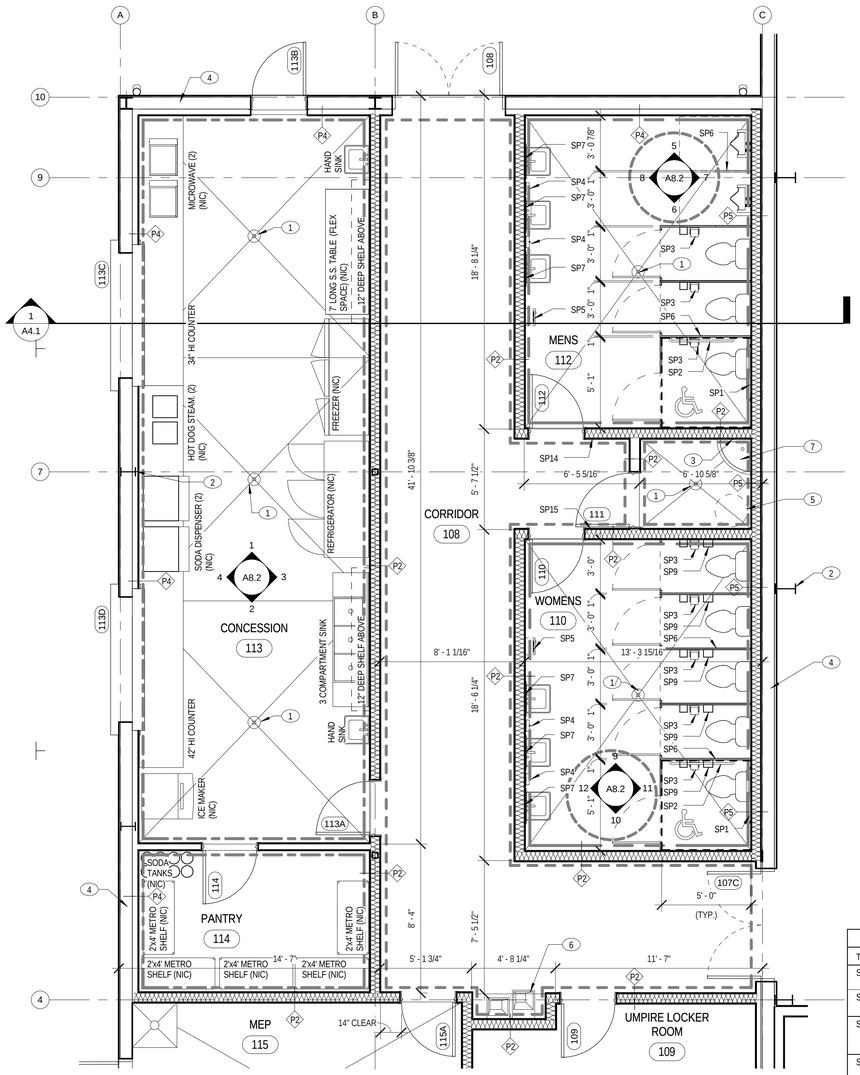

1 Enlarged Plan

1/4" = 1'-0"

FLOOR PLAN GENERAL NOTES:

1. ALL DIMENSIONS ARE FROM CENTERLINE OF COLUMN, EDGE OF CONCRETE OR MASONRY, OR FACE OF STUD WALLS, UNLESS OTHER WISE NOTED.

2. THE CONTRACTOR IS TO PROVIDE TREATED WOOD BLOCKING AS NEEDED FOR ALL WALL MOUNTED ITEMS OR ACCESSORIES.

3. PRIOR TO COMMENCEMENT OF WORK, THE CONTRACTOR SHALL FIELD VERIFY ALL EXISTING CONDITIONS, AND PLAN DIMENSIONS PRIOR TO THE START OF ANY CONSTRUCTION AND OR FABRICATION. IT IS THE CONTRACTORS RESPONSIBILITY TO NOTIFY THE ARCHITECT, IN WRITING OF ANY DISCREPANCIES FOUND.

4. ALL DOORS ARE TO BE 4" FROM FACE OF ADJACENT WALL FINISH OF PERPENDICULAR WALL TO THE EDGE OF THE DOOR FRAME, UNLESS OTHERWISE NOTED.

5. REFER TO TEXAS ACCESSIBILITY STANDARDS (T.A.S.) FOR ALL MOUNTING HEIGHTS, DOOR CLEARANCES, ETC.

6. PRIOR TO THE FABRICATION OF MILLWORK OR THE ORDERING OF ANY SPECIALTY ITEMS, THE CONTRACTOR SHALL VERIFY ALL DIMENSIONS TO ENSURE A PROPER FIT.

7. MINIMUM "R" RATING OF NEW CONSTRUCTION OF ENVELOPE SHALL COMPLY WITH THE FOLLOWING: ROOF: R-30, WALLS R-19.

8. REFER TO EXTERIOR FINISH SCHEDULE FOR IDENTIFICATION OF ALL EXTERIOR FINISH ITEMS.

WALL FINISH LEGEND:

- 5/8" TYPE "X" GYPSUM BOARD. TAPE, FLOAT, TEXTURE, PRIME AND PAINT. REFER TO SPECIFICATIONS & FINISH SCHEDULE.
- MARLITE BRAND F.R.P. (OR APPROVED EQUAL) w/ TRANSITION STRIPS OVER 5/8" MOISTURE RESISTANT GYPSUM BOARD
- MARLITE BRAND F.R.P. (OR APPROVED EQUAL) w/ TRANSITION STRIPS OVER 5/8" MOISTURE RESISTANT GYPSUM BOARD FROM F.F. TO 4'-0". PROVIDE MOISTURE RESISTANT GYP. BOARD (PTD.) FROM 4'-0" A.F.F. TO 6" ABOVE CEILING. REFER TO FINISH SCHEDULE FOR ADDITIONAL INFORMATION.
- ACOUSTICAL BATT INSULATION

KEY NOTES:

1. FLOOR DRAIN. RE: PLUMBING. SLOPE FLOOR TO DRAIN 1/4":FT. MAX.
2. PRE-ENGINEERED MTL. COLUMN. RE: STRUCTURAL. (TYP.)
3. FULL HEIGHT FRP WALL FINISH SURROUND OVER GYP. BOARD BEHIND MOP SINK.
4. PRE-ENGINEERED MTL WALL GIRT. RE: STRUCTURAL (TYP.)
5. WATER HEATER ON SHELF ABOVE. RE: PLUMBING.
6. HI-LO WATER COOLER. RE: PLUMBING.
7. MOP SINK. RE: PLUMBING.

10/26/2016 9:23:43 AM

INTERIOR PARTITION GENERAL NOTES:

1. REFER TO WALL PRIORITY LEGEND BELOW FOR CONDITIONS WHERE RATED PARTITIONS INTERSECT NON-RATED PARTITIONS.

2. "UNDERSIDE OF STRUCTURE" INDICATED AT THE HEAD CONDITIONS FOR EACH PARTITION TYPE IS DIAGRAMMATIC ONLY AND DOES NOT INDICATE EXACT CONSTRUCTION CONDITION.

A. TERMINATE FIRE RATED PARTITIONS AT STRUCTURAL MEMBERS WITH A RATING GREATER THAN OR EQUAL TO THE PARTITION.

B. INSTALL FRAMING AND GYPSUM BOARD TO OFFSET AROUND STRUCTURAL MEMBERS OR OTHER OBSTRUCTIONS TO MAINTAIN THE FIRE RESISTANCE RATING.

C. TERMINATE NON-RATED PARTITIONS AT STRUCTURAL MEMBERS WITH A CONTINUOUS LAYER OF GYPSUM BOARD TO MAINTAIN ACOUSTICAL, SMOKE, OR OTHER BARRIERS.

3. STOP STUDS AND GYPSUM BOARD 1/2" BELOW LINE OF STRUCTURE AND SEAL.

A. FIRE RESISTANCE RATED PARTITIONS SHALL BE INSTALLED WITH FIRE STOP SEALANT ALONG PERIMETER UNLESS NOTED OTHERWISE.

B. NON-RATED PARTITIONS SHALL BE INSTALLED WITH ACOUSTICAL SEALANT UNLESS NOTED OTHERWISE.

C. ALL OTHER PARTITIONS SHALL BE INSTALLED WITH SEALANT AS SCHEDULED.

4. ACOUSTICAL NOTES:

A. PROVIDE TWO (2) STUDS BETWEEN PENETRATIONS (OUTLETS) ON OPPOSITE SIDES OF ACOUSTICALLY IMPROVED WALLS. SEAL PERIMETER OF EACH OUTLET WITH ACOUSTICAL SEALANT AND SEAL BACK OF OUTLET WITH OUTLET BOX PADS.

B. SEALING AT THE PIPE PENETRATION IN MASONRY WALL:

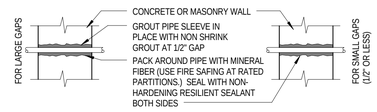

C.SEALING AT PIPE PENETRATION IN GYPSUM BOARD PARTITION:

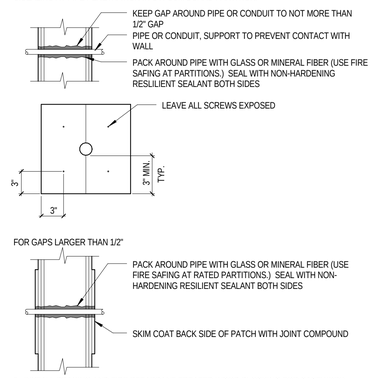

5. INSTALL BRACING AND FIRE RETARDANT TREATED WOOD BLOCKING FOR CASEWORK, EQUIPMENT, ETC., AT PARTITIONS AS REQUIRED.

6. AT FULL HEIGHT WALLS, PROVIDE SLOTTED DEFLECTION TRACK SYSTEM (SLIP CONNECTION) WITH FASTENERS BETWEEN METAL STUDS AND UNDERSIDE OF STRUCTURE.

7. REFER TO FINISH SCHEDULE FOR ALL CEILING AND WALL FINISHES.

SPECIAL ACCESSORY LEGEND

TAG	DESCRIPTION	MANUFACTURER	MODEL NO.	FINISH	REMARKS
SP1	GRAB BARS (BACK) 36" LONG	BOBRICK	B-6806-36	STAINLESS STEEL SATIN	-
SP2	GRAB BARS (SIDE) 42" LONG	BOBRICK	B-6806-42	STAINLESS STEEL SATIN	-
SP3	TOILET PAPER DISPENSER TWO ROLE SURFACE MOUNT	BOBRICK	B-2888	STAINLESS STEEL SATIN	2,3,4
SP4	SOAP DISPENSER - SURFACE MOUNTED ON WALL	BOBRICK	B-2111	STAINLESS STEEL SATIN	-
SP5	HAND DRYER	WORLD DRYER	MODEL A DA5-974	-	-
SP6	TOILET PARTITIONS	BOBRICK	SCRC SIERRA - SERIES	SC03 TIERRA COTTA	1, 4, 8
SP7	MIRROR - 24"X36"	BOBRICK	B-290	-	-
SP8	NOT USED	-	-	-	-
SP9	SAN. NAPKIN DISPOSER	BOBRICK	B-270	-	SURFACE MOUNTED
SP10	MOP RACK	BOBRICK	B223-24	-	2, 3, 4
SP11	PAPER TOWEL DISPENSER	BOBRICK	B26-20	STAINLESS STEEL SATIN	-
SP12	RECESSED KNOX BOX	KNOX 3200	7"x7"x3 3/4"	ALUMINUM	-
SP13	FIRE EXTINGUISHER	HUNTER DOUGLAS MODERNE PRECIOUS METALS	5"D x 20 1/2" H x 9"w	BAKED ENAMEL RED	3
SP14	MENS RESTROOM SIGN	INPRO SIGNSCAPE S320 ADA	6"x8"	BACKGROUND COLOR: LINEN 0232 TEXT COLOR: DARK BROWN 106	3
SP15	WOMENS RESTROOM SIGN	INPRO SIGNSCAPE S320 ADA	6"x8"	-	3
SP16	RISER ROOM SIGN	INPRO SIGNSCAPE S120 PERMANENT	6"x8"	-	5
SP17	NOT USED	-	-	-	-
SP18	FIRE EXTINGUISHER CABINET SEMI RECESSED	J.L. INDUSTRIES AMBASSADOR 1017 (w/ FIRE X OPTION IF IN RATED WALL)	11"x25"x 3 5/8"	WHITE POWDER COAT FINISH	

NOTE:
1. USE STANDARD HARDWARE TYPE - CHROME ZAMACK - "S"
2. ALL STAINLESS STELL ACCESSORIES TO HAVE A "SATIN FINISH"
3. MOUNT PER MFR. TO CONFORM TO ADAG/TAS
4. PROVIDE BLOCKING IN WALL PER MANUFACTURERS INSTRUCTIONS
5. CONFIRM FINAL LOCATION WITH FIRE MARSHALL.
6. REFER TO REFLECTED CEILING PLAN FOR ADDITIONAL INFORMATION.
7. DOOR GLAZING TO BE "CLEAR WIRE GLASS W/ SAFETY FILM."
8. PROVIDE DOOR HANDLES ON INTERIOR & EXTERIOR OF ALL H.C. ACCESSIBLE STALLS.

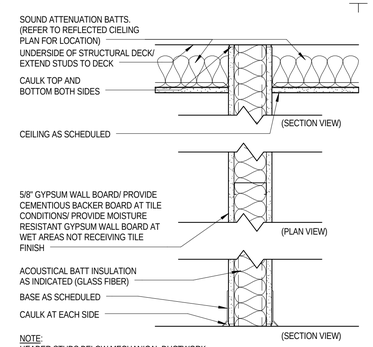

NOTE:
HEADER STUDS BELOW MECHANICAL DUCTWORK CROSSINGS AS REQUIRED

TYPE	STUD SIZE	WALL THICKNESS	INSUL.	STC RATING	RATING	UL NO.
P1	3 5/8"	4-7/8"	3-1/2"	48	N/A	N/A

P1 Partition Type - P1

1 1/2" = 1'-0"

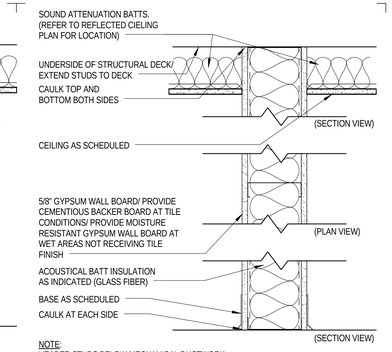

NOTE:
HEADER STUDS BELOW MECHANICAL DUCTWORK CROSSINGS AS REQUIRED

TYPE	STUD SIZE	WALL THICKNESS	INSUL.	STC RATING	RATING	UL NO.
P2	6"	7-1/4"	5-1/2"	48	N/A	N/A

P2 Partition Type - P2

1 1/2" = 1'-0"

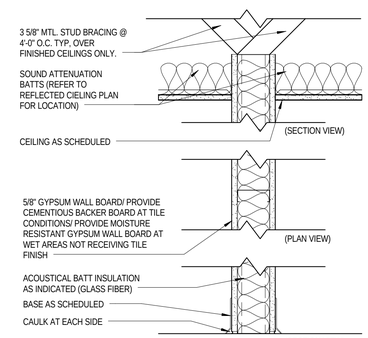

NOTE:
HEADER STUDS BELOW MECHANICAL DUCTWORK CROSSINGS AS REQUIRED

TYPE	STUD SIZE	WALL THICKNESS	INSUL.	STC RATING	RATING	UL NO.
P3	3 5/8"	4-7/8"	3-1/2"	48	N/A	N/A

P3 Partition Type - P3

1 1/2" = 1'-0"

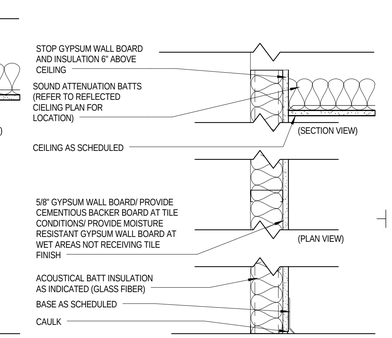

NOTE:
HEADER STUDS BELOW MECHANICAL DUCTWORK CROSSINGS AS REQUIRED

TYPE	STUD SIZE	WALL THICKNESS	INSUL.	STC RATING	RATING	UL NO.
P4	3 5/8"	4-1/4"	3-1/2"	45	N/A	N/A

P4 Partition Type - P4

1 1/2" = 1'-0"

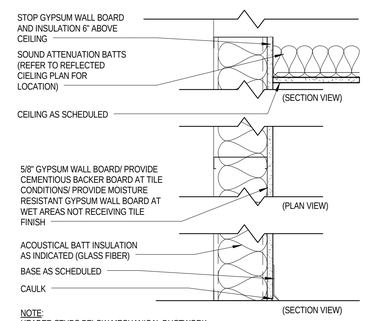

NOTE:
HEADER STUDS BELOW MECHANICAL DUCTWORK CROSSINGS AS REQUIRED

TYPE	STUD SIZE	WALL THICKNESS	INSUL.	STC RATING	RATING	UL NO.
P5	6"	6 5/8"	5-1/2"	45	N/A	N/A

P5 Partition Type - P5

1 1/2" = 1'-0"

REVISIONS

NO.	DESCRIPTION	DATE

PETER LEWIS
ARCHITECT + ASSOCIATES
334 West Water Street
Kerrville, TX 78028
(830) 896-4220
(830) 896-4226
www.pwlarchitect.com

REGISTERED ARCHITECT PETER W. LEWIS 18295 STATE OF TEXAS

10/21/16

CITY OF KERRVILLE 1889 TEXAS

City of Kerrville Athletic Complex Field House

Kerrville, Texas

NOT PUBLISHED. ALL RIGHTS RESERVED BY THE ARCHITECT. DRAWINGS AND SPECIFICATIONS AS INSTRUMENTS OF SERVICE ARE AND SHALL REMAIN THE PROPERTY OF THE ARCHITECT. THEY SHALL NOT BE USED ON OTHER PROJECTS OR EXTENSIONS TO THIS PROJECT EXCEPT BY AGREEMENT IN WRITING AND WITH APPROPRIATE COMPENSATION TO THE ARCHITECT. CONTRACTOR IS RESPONSIBLE FOR THE CONFIRMING AND CORRELATING DIMENSIONS AT JOB SITE. THE ARCHITECT WILL NOT BE RESPONSIBLE FOR CONSTRUCTION MEANS, METHODS, TECHNIQUES, SEQUENCES OR FOR SAFETY PRECAUTIONS AND PROGRAMS IN CONNECTION WITH THE PROJECT.

PROJECT NO. 20-1605

DATE 10/21/16

Enlarged Plan

SHEET NUMBER

A2.3

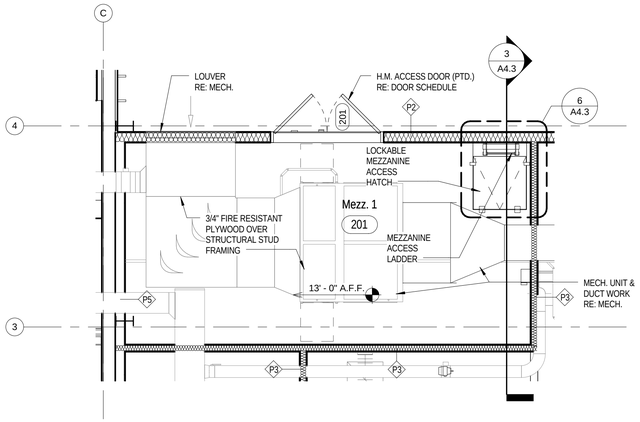

1 Floor Plan - Mech. Mezz West
1/4" = 1'-0"

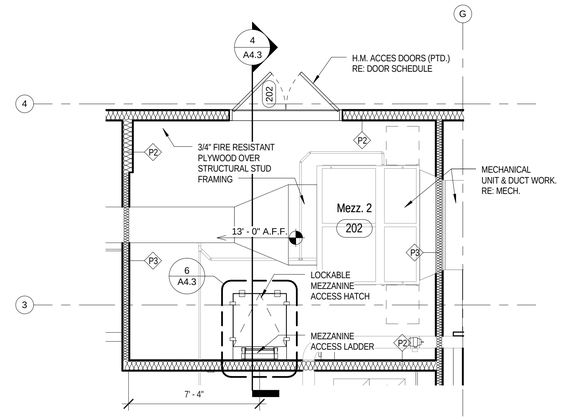

2 Floor Plan - Mech. Mezz East
1/4" = 1'-0"

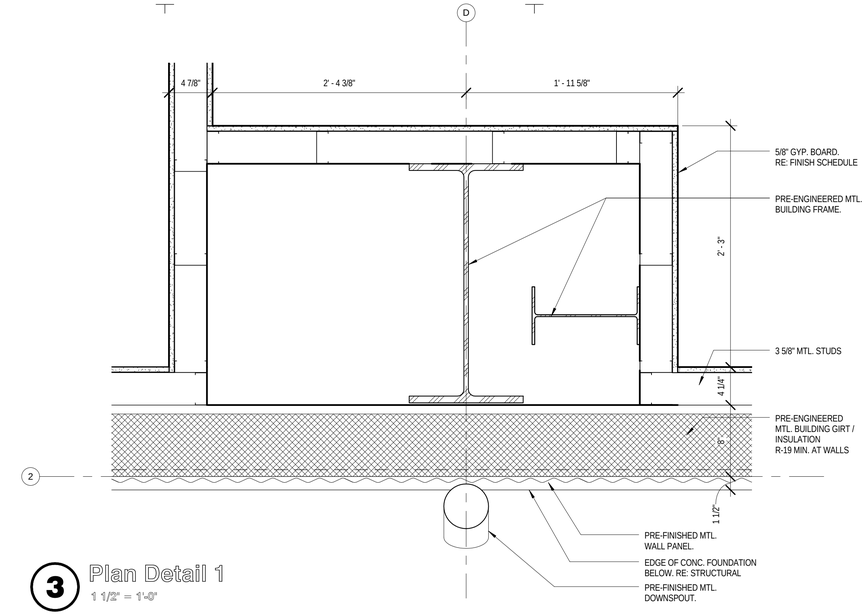

3 Plan Detail 1
1 1/2" = 1'-0"

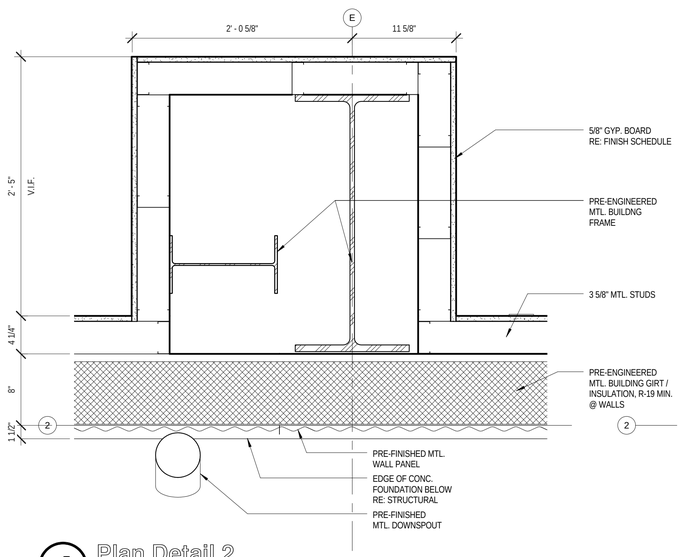

4 Plan Detail 2
1 1/2" = 1'-0"

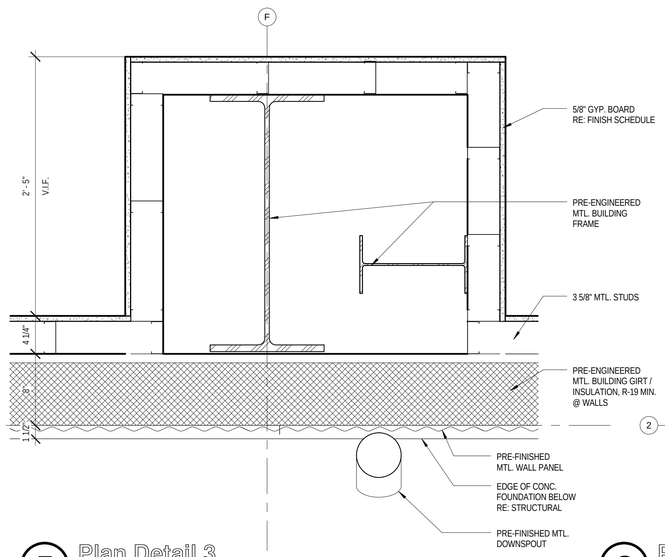

5 Plan Detail 3
1 1/2" = 1'-0"

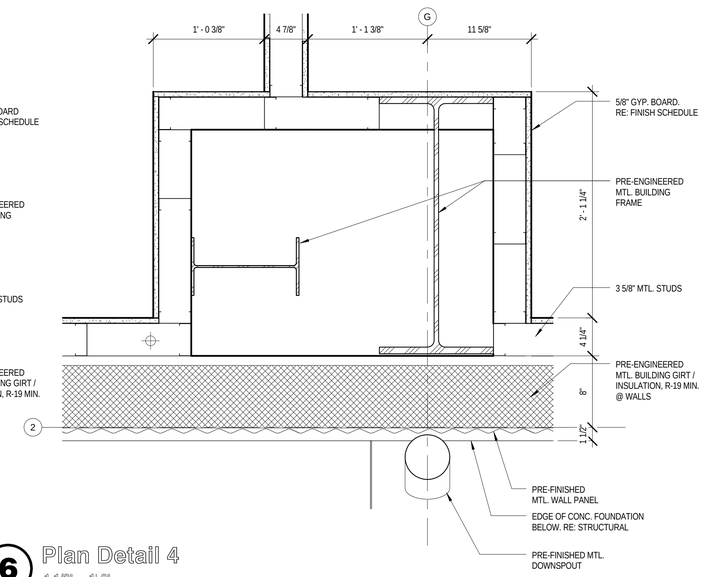

6 Plan Detail 4
1 1/2" = 1'-0"

REVISIONS

NO.	DESCRIPTION	DATE

PETER LEWIS
ARCHITECT + ASSOCIATES

334 West Water Street
Kerrville, TX 78028
(830) 896-4220
(830) 896-4226
www.pwlarchitect.com

REGISTERED ARCHITECT PETER W. LEWIS 18259 STATE OF TEXAS

10/21/16

CITY OF KERRVILLE 1889 TEXAS

City of Kerrville Athletic Complex Field House

Kerrville, Texas

NOT PUBLISHED. ALL RIGHTS RESERVED BY THE ARCHITECT. DRAWINGS AND SPECIFICATIONS AS INSTRUMENTS OF SERVICE ARE AND SHALL REMAIN THE PROPERTY OF THE ARCHITECT. THEY SHALL NOT BE USED ON OTHER PROJECTS OR EXTENSIONS TO THIS PROJECT EXCEPT BY AGREEMENT IN WRITING AND WITH APPROPRIATE COMPENSATION TO THE ARCHITECT. CONTRACTORS SHALL VERIFY AND BE RESPONSIBLE FOR CONFIRMING AND CORRELATING DIMENSIONS AT JOB SITE. THE ARCHITECT WILL NOT BE RESPONSIBLE FOR CONSTRUCTION MEANS, METHODS, TECHNIQUES, SEQUENCES OR FOR SAFETY PRECAUTIONS AND PROGRAMS IN CONNECTION WITH THE PROJECT.

PROJECT NO.	DATE
20-1605	10/21/16

Enlarged Plans & Plan Details

SHEET NUMBER

A2.4

10/26/2016 9:23:45 AM

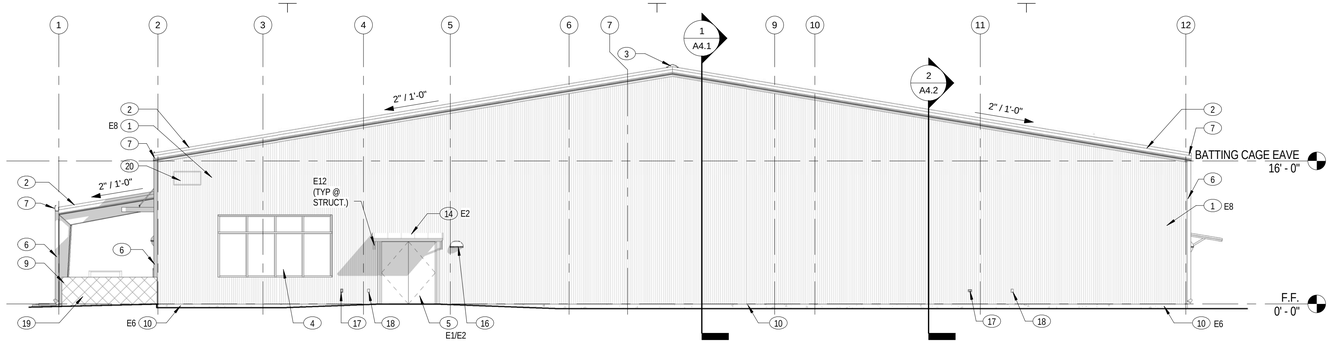

1 East Elevation
1/8" = 1'-0"

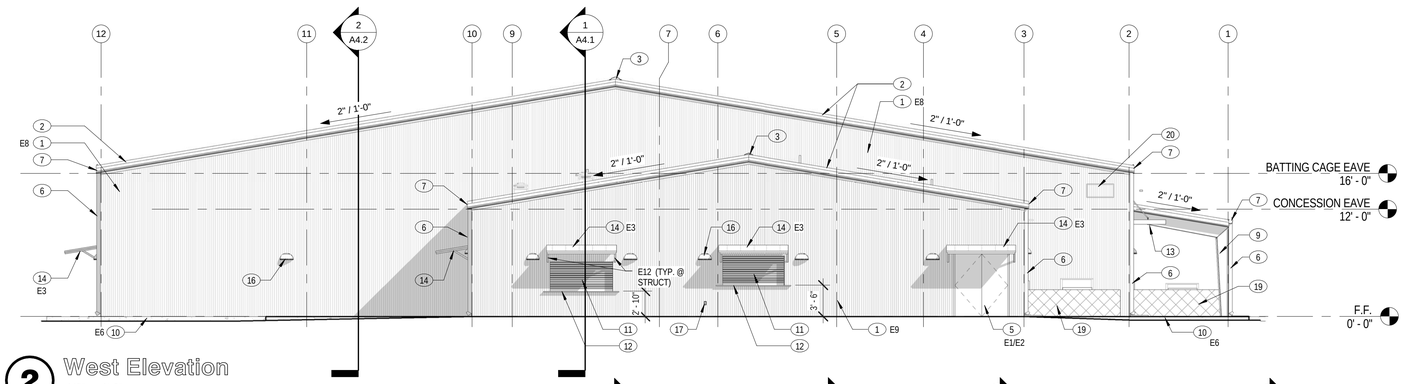

2 West Elevation
1/8" = 1'-0"

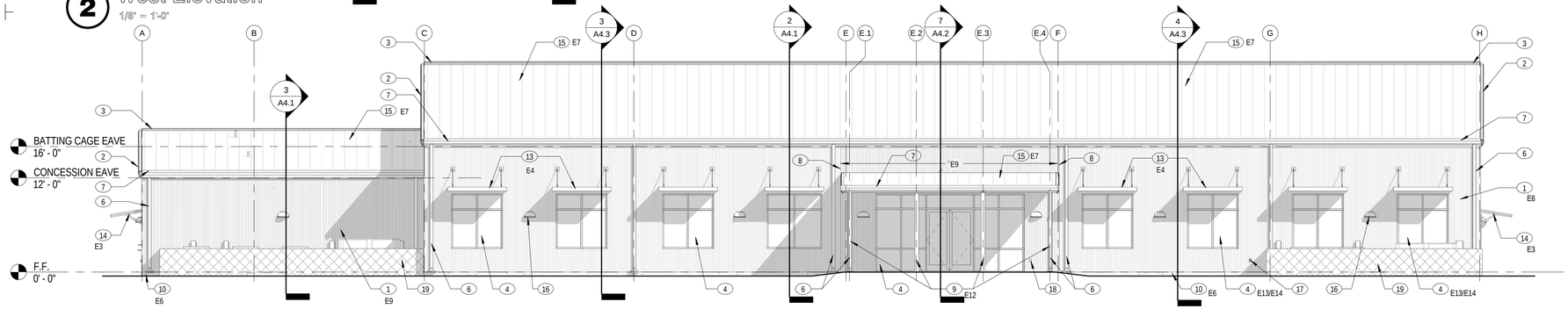

3 South Elevation
1/8" = 1'-0"

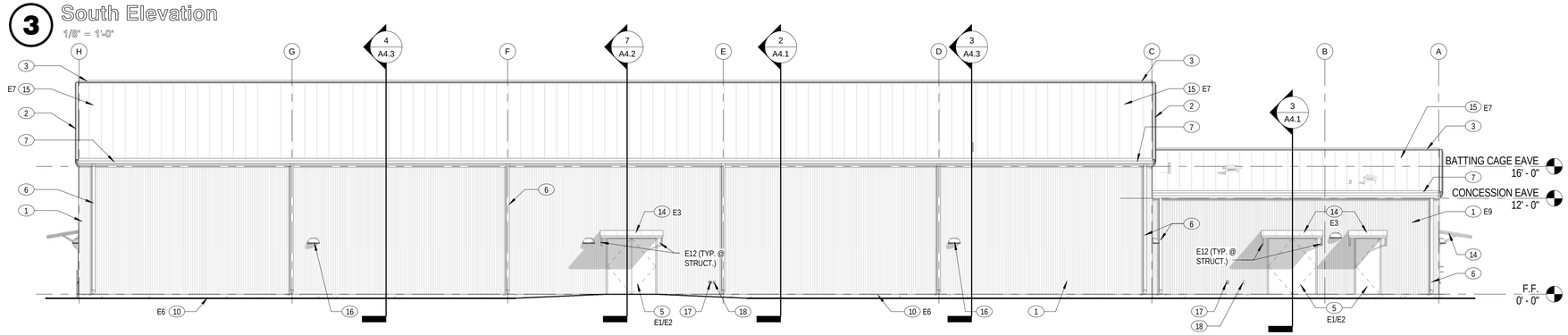

4 North Elevation
1/8" = 1'-0"

EXTERIOR FINISH SCHEDULE

NOTES:
1. FINAL SELECTION SHALL BE SELECTED BY ARCHITECT FROM FIELD MOCK-UPS AMD MATERIAL SUBMITTALS.
2. TBD = COLORS AND TEXTURES TO BE DETERMINED BY ARCHITECT FROM FIELD MOCK-UP.
3. REFER TO SPECIFICATIONS FOR ADDITIONAL INFORMATION.

MARK	DESCRIPTION	MATERIAL	FINISH / COLOR	COMMENTS
E1	HOLLOW METAL FRAMES	METAL (PRE-PRIMED)	SHERWIN WILLIAMS "SW 6677" GOLDENROD	-
E2	HOLLOW METAL DOORS	METAL (PRE-PRIMED)	SHERWIN WILLIAMS "SW 6677" GOLDENROD	-
E3	STEEL AWNING FRAMING (OVER DOORS)	METAL (PRE-PRIMED)	SHERWIN WILLIAMS "SW 6635" DETEMINED ORANGE	-
E4	STEEL CANOPY (OVER WINDOWS)	METAL	POWDER COAT SHERWIN WILLIAMS "SW 6677) GOLDENROD	-
E5	CONCRETE FLOOR (AT ALL EXTERIOR CONDITIONS)	CONCRETE	LIGHT BROOM FINISH	-
E6	CONCRETE FOUNDATION (VERTICAL SURFACE)	CONCRETE	PROVIDE RUBBED FINISH WHERE EXPOSED TO VIEW. (CONTRACTOR OPTION: PROVIDE SMOOTH SKIM COAT FINISH.)	-
E7	PRE-FINISHED METAL ROOF	26 GA. PRE-FINISHED METAL	MBCI GALVALUME PLUS OR APPROVED EQUAL	BASIS OF DESIGN, MBCI PBR ROOF PANEL
E8	PRE-FINISHED METAL WALL PANEL & TRIM	26 GA. PRE-FINISHED METAL	MBCI GALVALUME PLUS OR APPROVED EQUAL	BASIS OF DESIGN, MBCI PBC WALL PANEL
E9	PRE-FINISHED METAL WALL PANEL & WALL TRIM	26 GA. PRE-FINISHED METAL	MBCI EVERGLADE OR APPROVED EQUAL	BASIS OF DESIGN, MBCI PBC WALL PANEL
E10	ROOF METAL FLASHING	26 GA. PRE-FINISHED METAL	MBCI GALVALUME PLUS OR APPROVED EQUAL	-
E11	ROOF METAL FLASHING - NOT EXPOSED TO VIEW	METAL	GALVANIZED	-
E12	EXPOSED STRUCTURE	PAINT	SHERWIN WILLIAMS "SW 6635" DETERMINED ORANGE	-
E13	STOREFRONT FRAMING	ALUMINUM	CLEAR ANODIZED	-
E14	GLAZING 1	1" INSULATED GLASS	MANUF: PPG COLOR: ATLANTICA	-

KEY NOTES:

1. PRE-FINISHED METAL WALL PANEL.
2. PRE-FINISHED METAL FASCIA. MATCH ROOF COLOR.
3. CONTINUOUS PRE-FINISHED METAL RIDGE CAP. MATCH ROOF COLOR.
4. ALUM. STOREFRONT SYSTEM W/ 1" INSULATED GLAZING (TYP.)
5. HOLLOW METAL DOOR & FRAME. (PTD.)
6. PRE-FINISHED METAL DOWNSPOUT. MATCH ROOF COLOR.
7. PRE-FINISHED METAL GUTTER. MATCH ROOF COLOR.
8. METAL PANEL COLOR TRANSITION JOINT.
9. PRE-ENGINEERED METAL BUILDING FRAME (PTD.)
10. EXPOSED CONCRETE FOUNDATION. PROVIDE RUBBED FINISH (TYP.) RE: STRUCTURAL.
11. OVERHEAD COILING COUNTER DOOR. RE: DOOR SCHEDULE.
12. S.S. COUNTER TOP.
13. STEEL SHADE AWNING (PTD.) RE: STRUCTURAL.
14. STEEL FRAMED AWNING W/ PRE-FINISHED METAL ROOF (PTD.) RE: STRUCTURAL.
15. PRE-FINISHED METAL ROOF.
16. LIGHT FIXTURE. RE: ELEC. (TYP.)
17. HOSE BIBB. RE: PLUMBING.
18. EXTERIOR GFCI ELECTRICAL OUTLET. RE: ELEC.
19. 4' HIGH CHAIN LINK FENCE W/ WIND SCREEN TO MATCH DUGOUT.
20. MECHANICAL LOUVER. RE: MEP

REVISIONS

NO.	DESCRIPTION	DATE

PETER LEWIS
ARCHITECT + ASSOCIATES
334 West Water Street
Kerrville, TX 78028
(830) 896-4220
(830) 896-4226
www.pwlarchitect.com

REGISTERED ARCHITECT PETER WAYNE LEWIS 18255 STATE OF TEXAS

10/21/16

CITY OF KERRVILLE 1889 TEXAS

City of Kerrville Athletic Complex Field House
Kerrville, Texas

NOT PUBLISHED. ALL RIGHTS RESERVED BY THE ARCHITECT. DRAWINGS AND SPECIFICATIONS AS INSTRUMENTS OF SERVICE ARE AND SHALL REMAIN THE PROPERTY OF THE ARCHITECT. THEY SHALL NOT BE USED ON OTHER PROJECTS OR EXTENSIONS TO THIS PROJECT, EXCEPT BY AGREEMENT IN WRITING AND APPROPRIATE COMPENSATION TO THE ARCHITECT. CONTRACTOR IS RESPONSIBLE FOR THE CONFIRMING AND CORRELATING DIMENSIONS AT JOB SITE. THE ARCHITECT WILL NOT BE RESPONSIBLE FOR CONSTRUCTION MEANS, METHODS, TECHNIQUES, SEQUENCES OR FOR SAFETY PRECAUTIONS AND PROGRAMS IN CONNECTION WITH THE PROJECT.

PROJECT NO.	DATE
20-1605	10/21/16

Exterior Elevations

SHEET NUMBER

A3.1

10/26/2016 9:24:12 AM

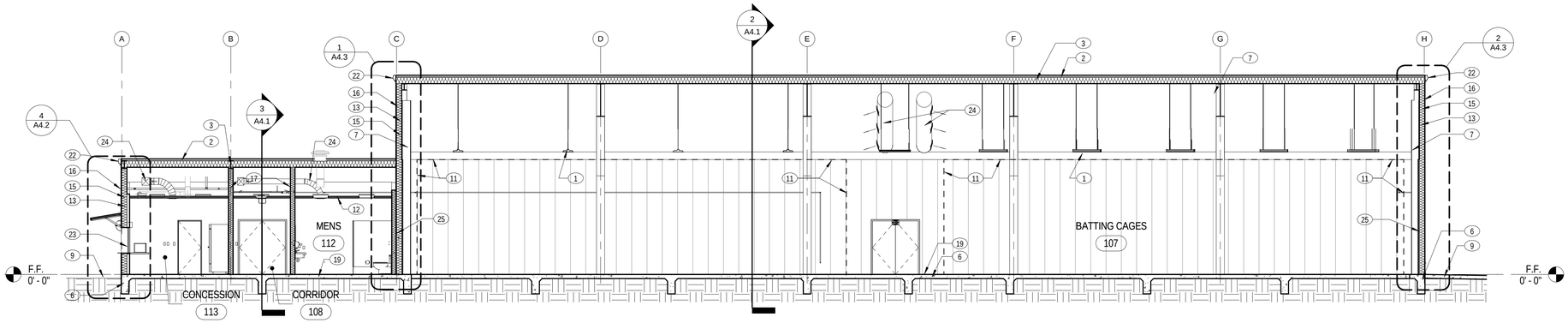

1 Building Section

1/8" = 1'-0"

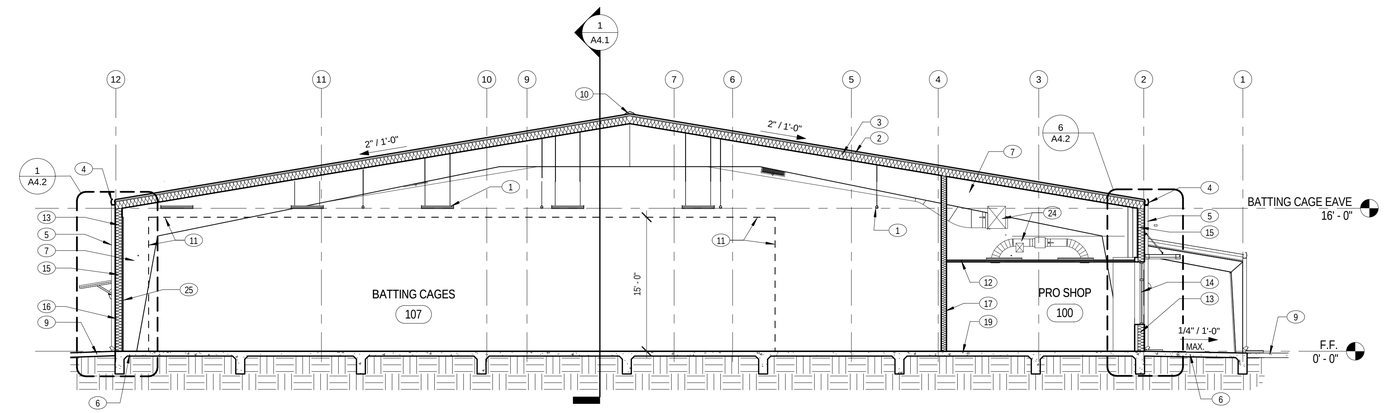

2 Building Section

1/8" = 1'-0"

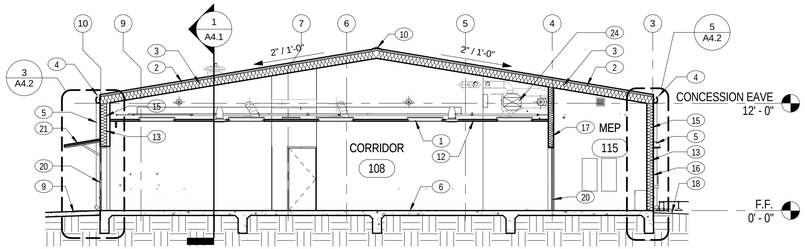

3 Building Section

1/8" = 1'-0"

KEY NOTES:

1. LIGHT FIXTURE. RE: ELECTRICAL (TYP.)
2. PRE-FINISH METAL ROOF OVER THERMAL BLOCKS, ON PRE-ENGINEERED METAL BUILDING PURLINS. (TYP.)
3. VINYL FACED ROOF INSULATION. (R-30 MIN.) (TYP.)
4. PRE-FINISHED MTL. GUTTER.
5. PRE-FINISHED MTL. DOWNSPOUT.
6. CONCRETE FOUNDATION OVER SELECT FILL. RE: STRUCTURAL.
7. PRE-ENGINEERED METAL BUILDING FRAME. RE: STRUCTURAL.
8. NOT USED.
9. CONCRETE PAVING. RE: CIVIL.
10. CONTINUOUS PRE-FINISHED MTL. RIDGE CAP.
11. BATTING CAGE/ NETTING. NOT IN CONTRACT.
12. CEILING AS SCHEDULED. RE: REFLECTED CEILING PLAN.
13. VINYL FACED WALL INSULATION. (R-19 MIN.) (TYP.)
14. ALUMINUM STOREFRONT SYSTEM W/ 1" INSULATED GLAZING. RE: WINDOW SCHEDULE.
15. PRE-ENGINEERED METAL WALL GIRTS. RE: STRUCTURAL.
16. PRE-FINISHED METAL WALL PANEL. (TYP.)
17. METAL STUD PARTITION. (TYP.)
18. FINISH GRADE. RE: CIVIL.
19. FLOOR FINISH AS SCHEDULED. RE: FINISH SCHEDULE.
20. HOLLOW METAL DOOR & FRAME. (PTD.)
21. CANOPY.
22. PRE-FINISHED METAL FASCIA.
23. OVERHEAD ROLLING GRILL. RE: DOOR SCHEDULE.
24. MECH. DUCTWORK. COORDINATE W/ PEMB FINAL DESIGN. RE: MECH.
25. INTERIOR METAL WALL LINER PANEL.

REVISIONS

NO.	DESCRIPTION	DATE

PETER LEWIS
ARCHITECT + ASSOCIATES

334 West Water Street
Kerrville, TX 78028
(830) 896-4220
(830) 896-4226
www.pwlarchitect.com

REGISTERED ARCHITECT PETER W. LEWIS 18259 STATE OF TEXAS

10/21/16

CITY OF KERRVILLE 1889 TEXAS

City of Kerrville Athletic Complex Field House

Kerrville, Texas

NOT PUBLISHED. ALL RIGHTS RESERVED BY THE ARCHITECT. DRAWINGS AND SPECIFICATIONS AS INSTRUMENTS OF SERVICE ARE THE EXCLUSIVE PROPERTY OF THE ARCHITECT. THEY SHALL NOT BE USED ON OTHER PROJECTS OR EXTENSIONS TO THIS PROJECT EXCEPT BY AGREEMENT IN WRITING AND WITH APPROPRIATE COMPENSATION TO THE ARCHITECT. CONTRACTOR IS RESPONSIBLE FOR THE CONFIRMING AND CORRELATING DIMENSIONS AT JOB SITE. THE ARCHITECT WILL NOT BE RESPONSIBLE FOR CONSTRUCTION MEANS, METHODS, TECHNIQUES, SEQUENCES OR FOR SAFETY PRECAUTIONS AND PROGRAMS IN CONNECTION WITH THE PROJECT.

PROJECT NO.	DATE
20-1605	10/21/16

Building Sections

SHEET NUMBER

A4.1

10/26/2016 9:24:15 AM

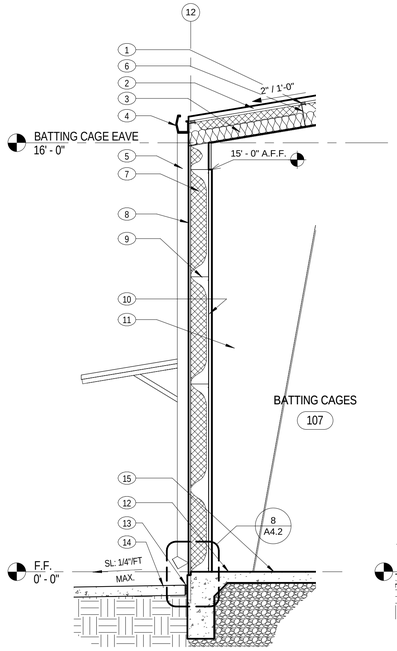

1 Wall Section
3/8" = 1'-0"

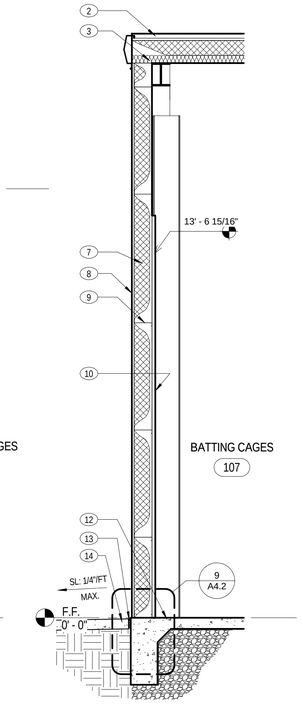

2 Wall Section
3/8" = 1'-0"

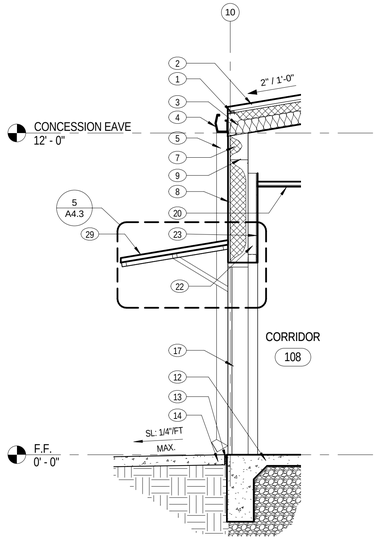

3 Wall Section
3/8" = 1'-0"

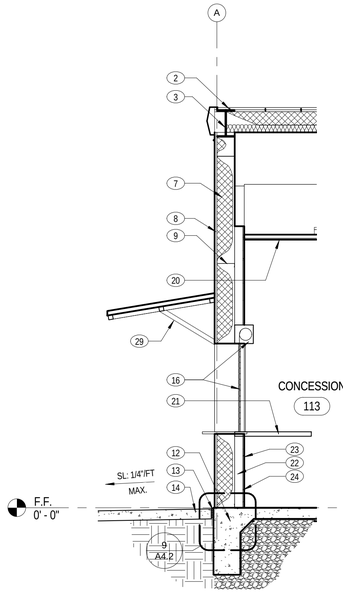

4 Wall Section
3/8" = 1'-0"

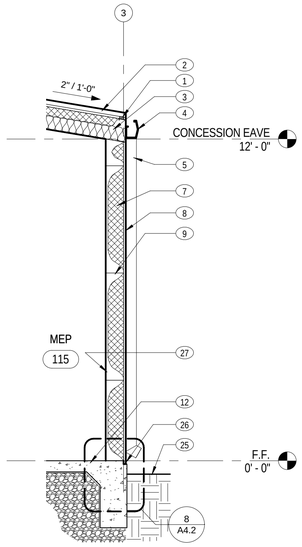

5 Wall Section
3/8" = 1'-0"

KEY NOTES:

1. THERMAL BLOCK (R-5 MIN.) TYPICAL AT ALL ROOF PURLINS. EXTEND 1" MIN PAST EACH SIDE OF PURLIN.
2. PRE-FINISHED METAL ROOF.
3. VINYL FACED BANDED INSULATION SYSTEM W/ VAPOR RETARDER. R-30 MINIMUM AT ROOF. (TYP.)
4. PRE-FINISHED METAL GUTTER. FINAL SIZE TO BE DETERMINED BY (PEMB) MANUFACTURER.
5. PRE-FINISHED METAL DOWNSPOUT. FINAL SIZE AND LOCATION TO BE DETERMINED BY PEMB MANUFACTURER. COORDINATE WITH ARCHITECT.
6. PEMB ROOF PURLIN.
7. VINYL FACED INSULATION W/ VAPOR RETARDER. R-19 MIN AT WALL. (TYP.)
8. PRE-FINISHED METAL WALL PANEL.
9. PEMB WALL GIRT. FINAL SPACING TO BE DETERMINED BY PEMB MANUFACTURER.
10. PRE-FINISHED INTERIOR METAL WALL PANEL LINER.
11. PEMB FRAME. RE: STRUCTURAL.
12. CONCRETE FOUNDATION. RE: STRUCTURAL.
13. CONTINUOUS JOINT FILLER. RE: CIVIL.
14. CONCRETE PAVING. RE: CIVIL.
15. NOT USED.
16. ROLLING COUNTER DOOR. RE: DOOR SCHEDULE
17. H.M. DOOR & FRAME (PTD.)
18. PRE-FINISHED MTL. SOFFIT PANEL.
19. ALUM. STOREFRONT SYSTEM W/ INSULATED GLAZING.
20. CEILING AS SCHEDULED.
21. PLAM COUNTERTOP.
22. 3 5/8" MTL. STUD FRAMING.
23. 5/8" GYP. BOARD. RE: FINISH SCHEDULE.
24. FRP PANEL.
25. FINISH GRADE. RE: CIVIL
26. 1 1/2" X 1 1/2" LUG. RE: STRUCTURAL
27. 3/4" UNFINISHED FIRE RESISTANT PLYWOOD FROM F.F. TO 8'-0".
28. PRE-ENGINEERED MTL. AWNING. (PRE-FINISHED) PROVIDE CLOSURE TRIM AT ALL WAL PENETRATIONS. MATCH MTL. WALL PANEL COLOR. RE: STRUCTURAL.
29. STL. FRAMED MTL. AWNING (PTD.) W/ PRE FINISHED MTL. ROOF PANELS. PROVIDE CLOSURE TRIM AT ALL WALL PENETRATIONS. MATCH MTL. WALL PANEL COLOR. RE: STRUCTURAL

REVISIONS

NO.	DESCRIPTION	DATE

PETER LEWIS
ARCHITECT + ASSOCIATES
334 West Water Street
Kerrville, TX 78028
(830) 896-4220
(830) 896-4226
www.pwlarchitect.com

REGISTERED ARCHITECT PETER W. LEWIS 18259 STATE OF TEXAS

10/21/16

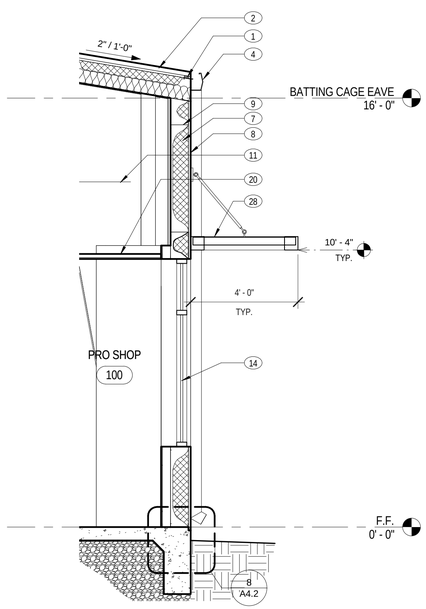

6 Wall Section
3/8" = 1'-0"

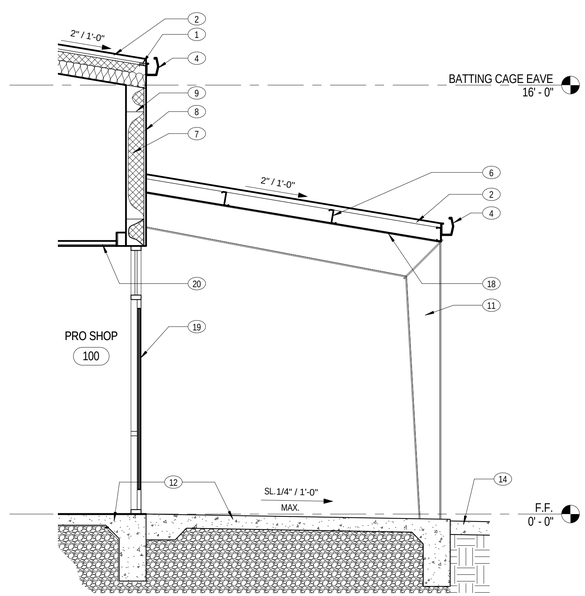

7 Wall Section
3/8" = 1'-0"

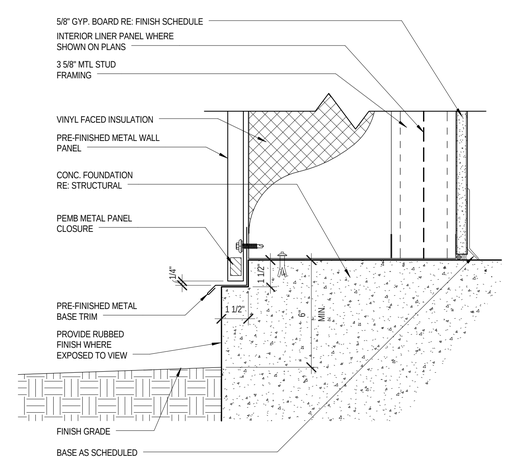

8 Lug Detail
3" = 1'-0"

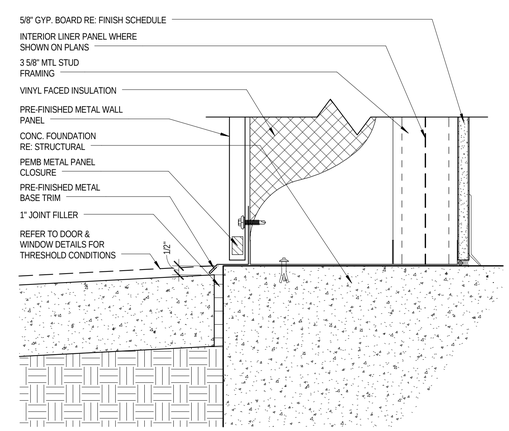

9 Lug Detail @ Paving
3" = 1'-0"

City of Kerrville Athletic Complex Field House

Kerrville, Texas

NOT PUBLISHED. ALL RIGHTS RESERVED BY THE ARCHITECT. DRAWINGS AND SPECIFICATIONS AS INSTRUMENTS OF SERVICE ARE AND SHALL REMAIN THE PROPERTY OF THE ARCHITECT. THEY SHALL NOT BE USED ON OTHER PROJECTS OR EXTENSIONS OF THIS PROJECT EXCEPT BY AGREEMENT WITH AND WITHOUT APPROPRIATE COMPENSATION TO THE ARCHITECT. CONTRACTOR IS RESPONSIBLE FOR THE CONFIRMING AND CORRELATING DIMENSIONS AT JOB SITE. THE ARCHITECT WILL NOT BE RESPONSIBLE FOR CONSTRUCTION MEANS, METHODS, TECHNIQUES, SEQUENCES OR FOR SAFETY PRECAUTIONS AND PROGRAMS IN CONNECTION WITH THE PROJECT.

PROJECT NO.	DATE
20-1605	10/21/16

Wall Sections

SHEET NUMBER

A4.2

10/26/2016 9:24:18 AM

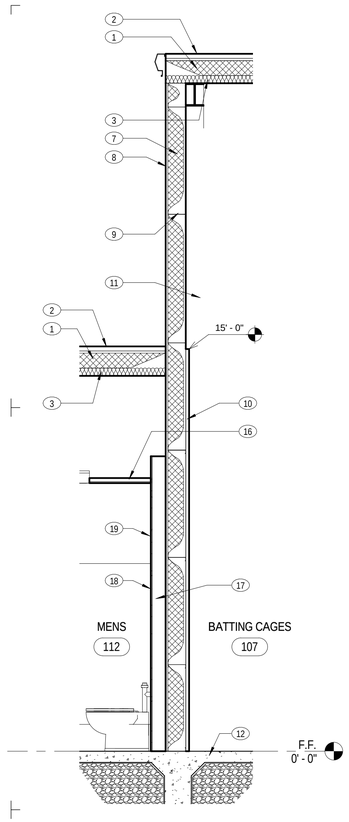

1 Wall Section
3/8" = 1'-0"

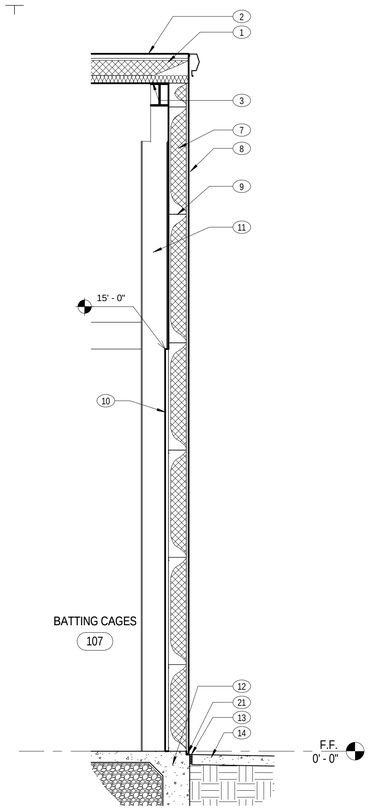

2 Wall Section
3/8" = 1'-0"

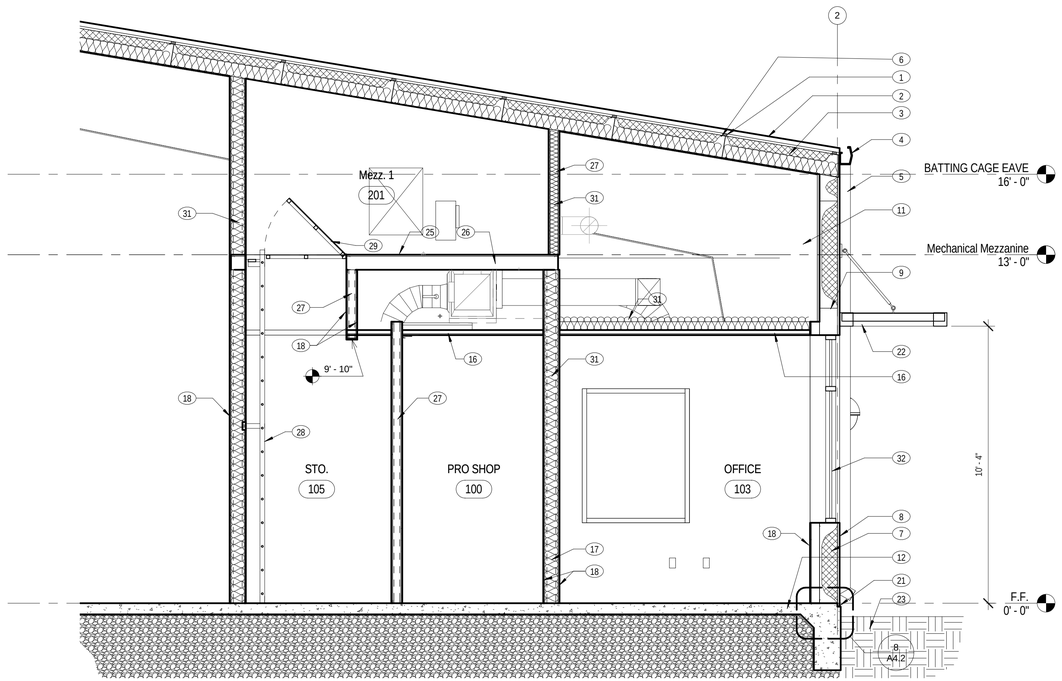

3 Wall Section @ Mecahnical Mezzanine West
3/8" = 1'-0"

KEY NOTES:

1. THERMAL BLOCK (R-5 MIN.) TYPICAL AT ALL ROOF PURLINS. EXTEND 1" MIN PAST EACH SIDE OF PURLIN.
2. PRE-FINISHED METAL ROOF.
3. VINYL FACED BANDED INSULATION SYSTEM W/ VAPOR RETARDER. R-30 MINIMUM AT ROOF. (TYP.)
4. PRE-FINISHED METAL GUTTER. FINAL SIZE TO BE DETERMINED BY (PEMB) MANUFACTURER.
5. PRE-FINISHED METAL DOWNSPOUT. FINAL SIZE AND LOCATION TO BE DETERMINED BY PEMB MANUFACTURER. COORDINATE WITH ARCHITECT.
6. PEMB ROOF PURLIN.
7. VINYL FACED INSULATION W/ VAPOR RETARDER. R-19 MIN AT WALL. (TYP.)
8. PRE-FINISHED METAL WALL PANEL.
9. PEMB WALL GIRT. FINAL SPACING TO BE DETERMINED BY PEMB MANUFACTURER.
10. PRE-FINISHED INTERIOR METAL WALL PANEL LINER.
11. PEMB FRAME. RE: STRUCTURAL.
12. CONCRETE FOUNDATION. RE: STRUCTURAL.
13. CONTINUOUS JOINT FILLER. RE: CIVIL.
14. CONCRETE PAVING. RE: CIVIL.
15. NOT USED.
16. CEILING AS SCHEDULED
17. 6" MTL. STUD WALL.
18. 5/8" GYP. BOARD. RE: FINISH SCHEDULE
19. FRP PANEL.
20. NOT USED
21. 1 1/2" X 1 1/2" LUG. RE: STRUCTURAL
22. PRE-ENGINEERED MTL. AWNING. (PRE-FINISHED) PROVIDE CLOSURE TRIM AT ALL WALL PENETRATIONS. MATCH MTL. WALL PANEL COLOR. RE: STRUCTURAL.
23. FINISH GRADE. RE: CIVIL
24. TREATED WOOD BLOCKING. INSTALLATION AS REQ'D FOR WALL MOUNTED ITEMS. (TYP.)
25. 3/4" F.R. T&G PLYWOOD DECKING.
26. 6" STRUCTURAL STUD FRAMING. RE: STRUCTURAL.
27. 3 5/8" MTL. STUD WALL.
28. MEZZANINE ACCESS LADDER.
29. LOCKABLE MEZZANINE ACCESS DOOR.
30. GYP. BOARD SOFFIT, OVER MTL. STUD FRAMING.
31. ACOUSTICAL BATT INSULATION.
32. ALUM. STOREFRONT SYSTEM W/ INSULATED GLAZING.
33. H.M. DOOR & FRAME ACCESS DOOR (PTD.)
34. 8" STRUCTURAL STUD FRAMING. RE: STRUCTURAL.

REVISIONS

NO.	DESCRIPTION	DATE

PETER LEWIS
ARCHITECT + ASSOCIATES
334 West Water Street
Kerrville, TX 78028
(830) 896-4220
(830) 896-4226
www.pwlarchitect.com

REGISTERED ARCHITECT PETER W. LEWIS 18259 STATE OF TEXAS

10/21/16

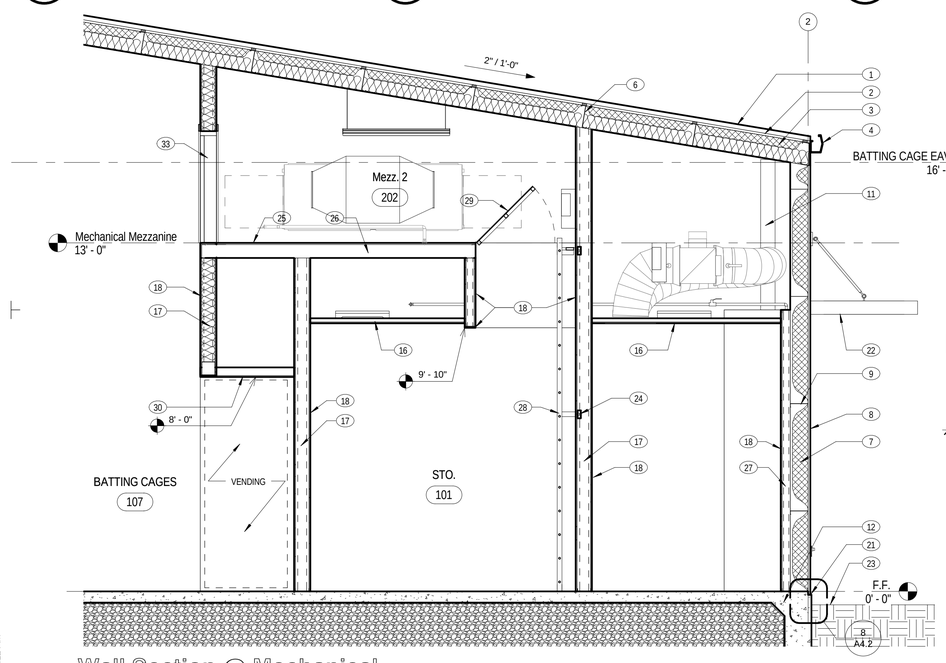

4 Wall Section @ Mechanical Mezzanine East
3/8" = 1'-0"

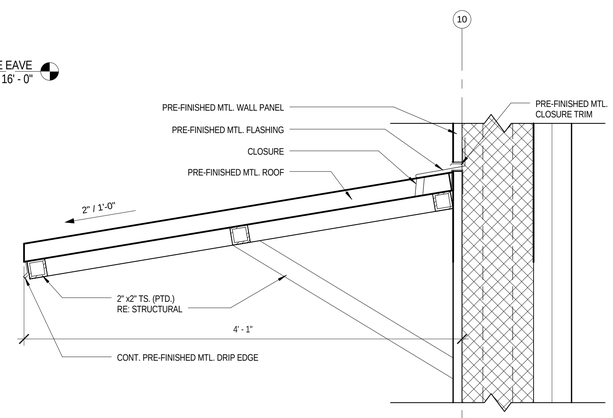

5 Awning Detail
1 1/2" = 1'-0"

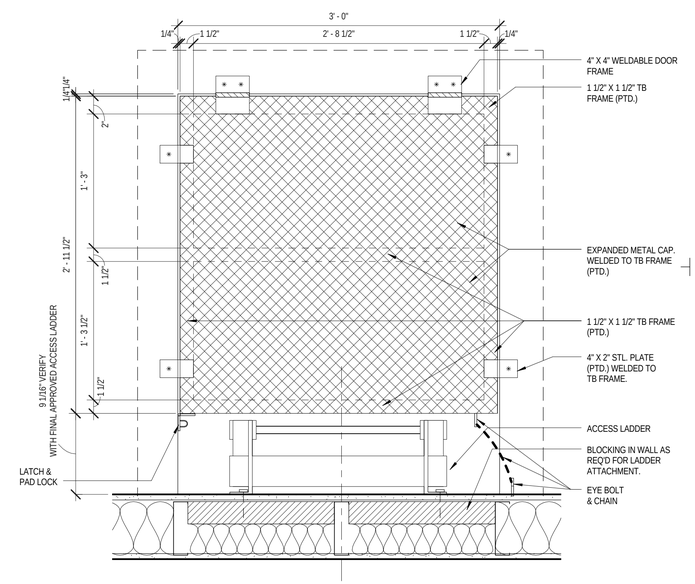

6 Mezzanine Access Hatch Detail
1 1/2" = 1'-0"

CITY OF KERRVILLE 1889 TEXAS

City of Kerrville Athletic Complex Field House

Kerrville, Texas

NOT PUBLISHED. ALL RIGHTS RESERVED BY THE ARCHITECT. DRAWINGS AND SPECIFICATIONS AS INSTRUMENTS OF SERVICE ARE AND SHALL REMAIN THE PROPERTY OF THE ARCHITECT. THEY SHALL NOT BE USED ON OTHER PROJECTS OR EXTENSIONS TO THIS PROJECT EXCEPT BY AGREEMENT IN WRITING AND WITH APPROPRIATE COMPENSATION TO THE ARCHITECT. CONTRACTORS SHALL VERIFY AND BE RESPONSIBLE FOR CONFIRMING AND CORRELATING DIMENSIONS AT JOB SITE. THE ARCHITECT WILL NOT BE RESPONSIBLE FOR CONSTRUCTION MEANS, METHODS, TECHNIQUES, SEQUENCES OR FOR SAFETY PRECAUTIONS AND PROGRAMS IN CONNECTION WITH THE PROJECT.

PROJECT NO.	DATE
20-1605	10/21/16

Wall Sections

SHEET NUMBER

A4.3

10/26/2016 9:24:21 AM

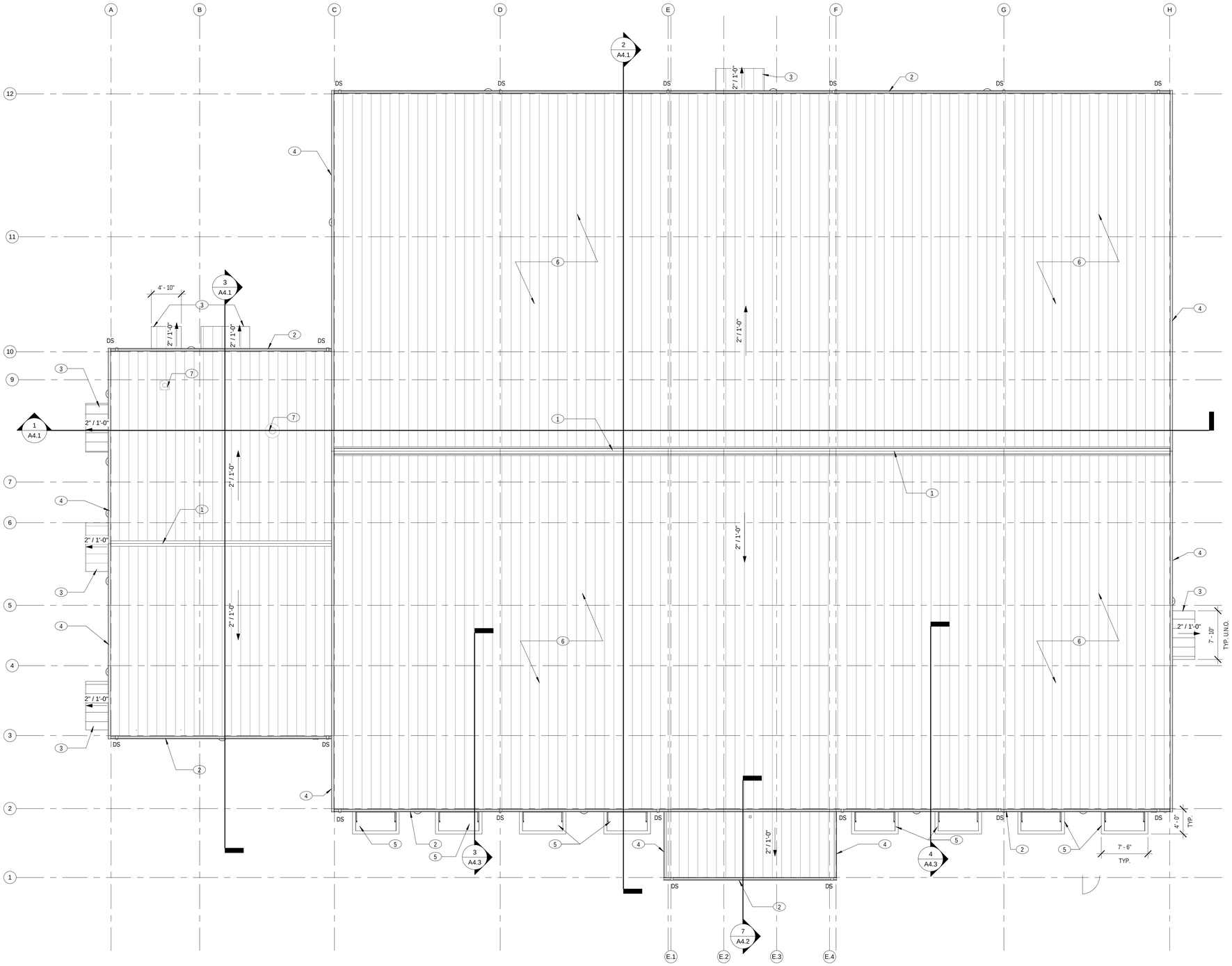

ROOF PLAN GENERAL NOTES:

1. ALL ROOFING DETAILS SHALL COMPLY WITH "SMACNA" AND "NRCA" REQUIREMENTS.

2. ALL DIMENSIONS ARE TO CENTERLINE OF COLUMN, FACE OF MASONRY, OR FACE OF STUD.

3. PROVIDE PRE-CAST CONCRETE SPLASHBLOCKS AT ALL DOWNSPOUT LOCATIONS.

4. ALL FINAL SIZES AND GAUGE OF THE GUTTERS & DOWNSPOUTS ARE TO BE CALCULATED BY THE PEMB MANUFACTURER.

5. MINIMUM R-RATING FOR ROOF INSULATION TO BE: R-30. PROVIDE R-5 MIN. THERMAL BLOCK BETWEEN PURLIN & ROOF. THERMAL BLOCK TO EXTEND 1" BEYOND EACH SIDE OF PURLIN. CONTRACTOR TO COORDINATE WITH PEMB MANUFACTURER.

ROOF PLAN LEGEND:

	PRE-FINISHED METAL ROOF
DS	DOWNSPOUT LOCATION (PRE-FINISHED METAL)

KEY NOTES:

1. CONTINUOUS PRE-FINISHED MTL. RIDGE CAP (TYP.)
2. CONTINUOUS PRE-FINISHED MTL. GUTTER
3. STL. FRAMED METAL AWNING. FRAME TO BE PAINTED. RE: STRUCTURAL
4. PRE-FINISHED MTL. RAKE FASCIA
5. PRE-ENGINEERED MTL. AWNING (PRE-FINISHED) RE: STRUCTRUAL. BASIS OF DESIGN: METALLIC PRODUCTS, PERSONNEL DOOR CANOPIES.
6. PRE-FINISHED METAL ROOF.
7. MECHANICAL ROOF EXHAUST. RE: MECHANICAL

REVISIONS

NO.	DESCRIPTION	DATE

PETER LEWIS
ARCHITECT + ASSOCIATES

334 West Water Street
Kerrville, TX 78028
(830) 896-4220
(830) 896-4226
www.pwlarchitect.com

REGISTERED ARCHITECT PETER W. LEWIS 18259 STATE OF TEXAS

10/21/16

CITY OF KERRVILLE 1889 TEXAS

City of Kerrville Athletic Complex Field House

Kerrville, Texas

NOT PUBLISHED. ALL RIGHTS RESERVED BY THE ARCHITECT. DRAWINGS AND SPECIFICATIONS AS INSTRUMENTS OF SERVICE ARE AND SHALL REMAIN THE PROPERTY OF THE ARCHITECT. THEY SHALL NOT BE USED ON OTHER PROJECTS OR EXTENSIONS TO THIS PROJECT EXCEPT BY AGREEMENT IN WRITING AND WITH APPROPRIATE COMPENSATION TO THE ARCHITECT. CONTRACTOR SHALL VERIFY ALL DATA CONFIRMING AND CORRELATING DIMENSIONS AT JOB SITE. THE ARCHITECT WILL NOT BE RESPONSIBLE FOR CONSTRUCTION MEANS, METHODS, TECHNIQUES, SEQUENCES OR FOR SAFETY PRECAUTIONS AND PROGRAMS IN CONNECTION WITH THE PROJECT.

PROJECT NO.	DATE
20-1605	10/21/16

Roof Plan

SHEET NUMBER

A5.1

10/26/2016 9:24:22 AM

1 Roof Plan
1/8" = 1'-0"

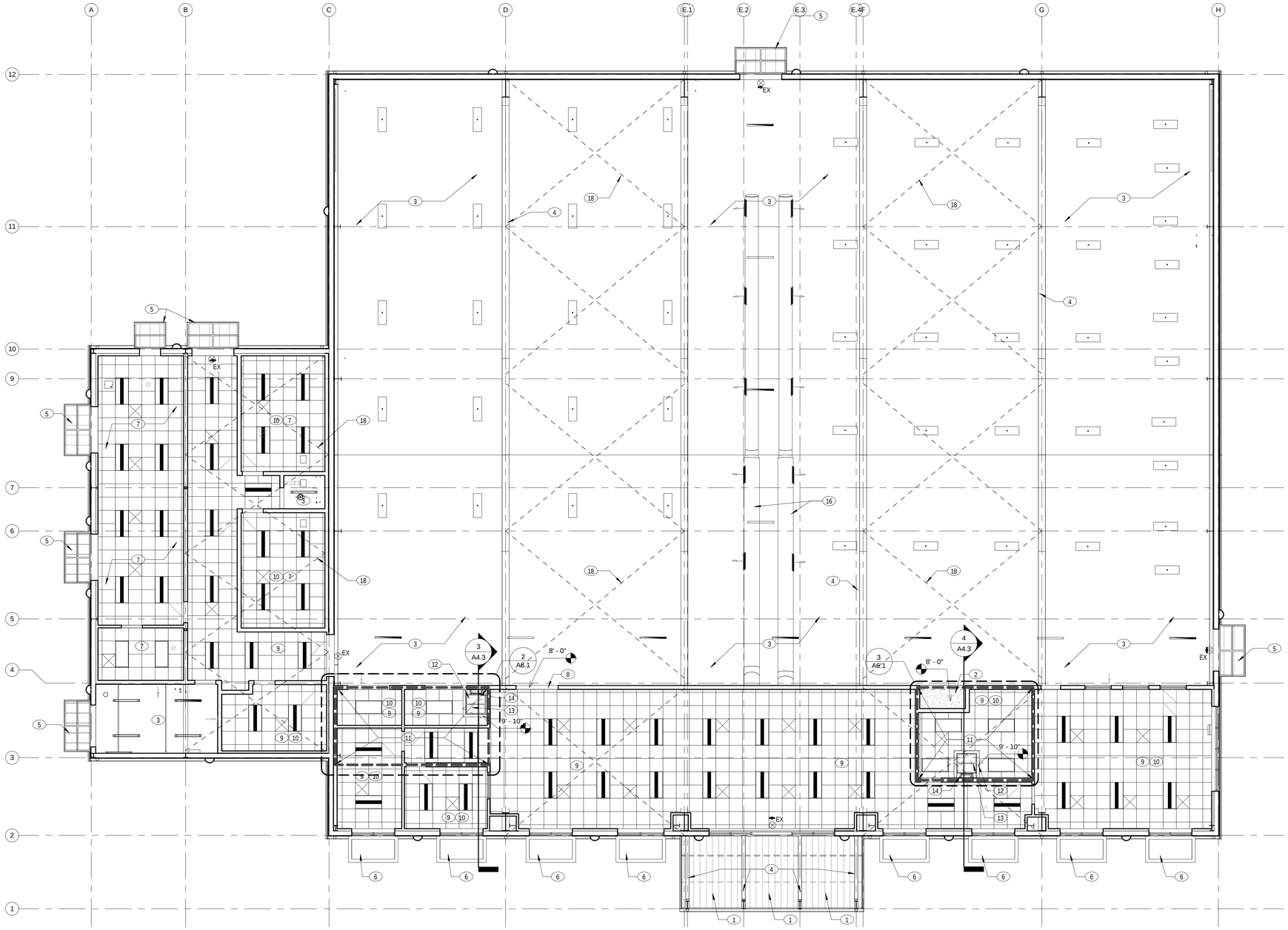

1 Reflected Ceiling Plan
1/8" = 1'-0"

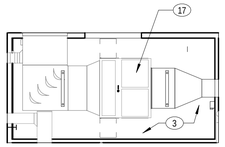

2 Mech. Mezz. (West) RCP
1/8" = 1'-0"

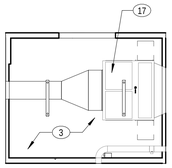

3 Mech. Mezz. (East) RCP
1/8" = 1'-0"

REFLECTED CEILING PLAN GENERAL NOTES:

1. TYPICAL FINISH CEILING HEIGHT IS TO BE 10'-0" A.F.F., UNLESS OTHERWISH NOTED.

2. ALL FIXTURES ARE SHOWN FOR DIMENSIONAL LOCATION ONLY. VERIFY WITH MEP DRAWINGS. ANY DESCREPANCIES SHALL BE BROUGHT TO THE ATTENTION OF THE ARCHITECT.

3. THE GENERAL CONTRACTOR IS TO COORDINATE ALL MEP AND SPRINKLER SYSTEMS AND SUBMIT COORDINATED PLAN TO ARCHITECTS FOR REVIEW AND APPROVAL PRIOR TO PERMITTING, FABRICATING AND INSTALLATION OF ANY SYSTEM.

RCP. LEGEND:

- LED TROFFERS
- LED BAY LIGHTING
- SUSPENDED STRIP LIGHT w/ SAFETY CAGE
- EX EXIT SIGN
- WALL SCONCE
- EM EMERGENCY LIGHT
- SUPPLY DIFFUSER
- RETURN DIFFUSER
- 2'x2' ACOUSTICAL LAY-IN CEILING
- EXTENTS OF MECH. MEZZANINE.

KEY NOTES:

1. PRE-FINISHED METAL SOFFIT PANEL.
2. GYPSUM BOARD SOFFIT. (PTD.)
3. EXPOSED "WHITE" VINYL WRAPPED R-30 INSULATION ON STRAPS BETWEEN PURLINS. 4" OVER PURLINS, & 8" BETWEEN (TYP.)
4. PEMB STRUCTURAL FRAME. PRIMER GREY FINISH. RE: STRUCTURAL (TYP.) PAINT WHERE INDICATED ON DRAWINGS.
5. STL. FRAME METAL PANEL AWNING. FRAME TO BE PAINTED. RE: STRUCTURAL
6. PRE-ENGINEERED METAL AWNING. (PRE-FINISHED) RE: STRUCTURAL.
7. 2'X2' VINYL FACED ACOUSTICAL CEILING TILE.
8. GYP. BOARD HEAD WALL. (PTD.)
9. 2'X2' SUSPENDED ACOUSTICAL CEILING TILE. TYP. UNLESS NOTED OTHERWISE.
10. PROVIDE ACOUSTICAL BATT INSULATION ABOVE CEILING.
11. MECH. MEZZANINE ABOVE.
12. GYP. BOARD OVER METAL STUD HEADWALL (PTD.) AT MEZZ. ACCESS.
13. LOCKABLE MEZZANINE ACCESS DOOR.
14. MEZZ. ACCESS LADDER.
15. NOT USED
16. MECHANIAL DUCT. RE: MECH.
17. MECH. UNIT. RE: MECH.
18. CROSS BRACING. RE: STRUCTURAL.

REVISIONS

NO.	DESCRIPTION	DATE

PETER LEWIS
ARCHITECT + ASSOCIATES

334 West Water Street
Kerrville, TX 78028
(830) 896-4220
(830) 896-4226
www.pwlarchitect.com

REGISTERED ARCHITECT PETER W. LEWIS 18259 STATE OF TEXAS

10/21/16

CITY OF KERRVILLE 1889 TEXAS

City of Kerrville Athletic Complex Field House

Kerrville, Texas

NOT PUBLISHED. ALL RIGHTS RESERVED BY THE ARCHITECT. DRAWINGS AND SPECIFICATIONS AS INSTRUMENTS OF SERVICE ARE AND SHALL REMAIN THE PROPERTY OF THE ARCHITECT. THEY SHALL NOT BE USED ON OTHER PROJECTS OR EXTENSIONS TO THIS PROJECT, EXCEPT BY AGREEMENT IN WRITING AND APPROPRIATE COMPENSATION TO THE ARCHITECT. CONTRACTOR IS RESPONSIBLE FOR THE CONFIRMING AND CORRELATING DIMENSIONS AT JOB SITE. THE ARCHITECT WILL NOT BE RESPONSIBLE FOR CONSTRUCTION MEANS, METHODS, TECHNIQUES, SEQUENCES OR FOR SAFETY PRECAUTIONS AND PROGRAMS IN CONNECTION WITH THE PROJECT.

PROJECT NO.	DATE
20-1605	10/21/16

Reflected Ceiling Plan

SHEET NUMBER

A6.1

10/26/2016 9:24:29 AM

DOOR SCHEDULE

		DIMENSION			DOORS			FRAMES			DETAILS				
NUMBER	LOCATION	WIDTH	HEIGHT	THICKNESS	MARK	MATERIAL	FINISH	TYPE	MATERIAL	FINISH	HEAD	JAMB	THRESHOLD	FIRE RATING	COMMENTS
100	PRO-SHOP	6' - 0"	7' - 10"	0' - 1 3/4"	D1	AL	CA	F3	AL	CA			3/A7.2	N/A	
101	STORAGE	3' - 0"	7' - 0"	0' - 1 3/4"	D2	HM	PTD	F1	HM	PTD	3/A7.1	4/A7.1	5/A7.1		
102A	PARENT OBSERVATION/PARTY	3' - 0"	7' - 0"	0' - 1 3/4"	D3	HM	PTD	F1	HM	PTD	1/A7.1	2/A7.1	5/A7.1		
102B	PARENT OBSERVATION/PARTY	3' - 0"	7' - 0"	0' - 1 3/4"	D3	HM	PTD	F1	HM	PTD	3/A7.1	4/A7.1	5/A7.1		
103	OFFICE	3' - 0"	7' - 0"	0' - 1 3/4"	D3	HM	PTD	F1	HM	PTD	3/A7.1	4/A7.1	5/A7.1		
104	OFFICE	3' - 0"	7' - 0"	0' - 1 3/4"	D3	HM	PTD	F1	HM	PTD	1/A7.2	2/A7.1	5/A7.1		
105	STORAGE	6' - 0"	7' - 0"	0' - 1 3/4"	D2 (PAIR)	HM	PTD	F2	HM	PTD	1/A7.2	4/A7.1	5/A7.1		
106	STORAGE	6' - 0"	7' - 0"	0' - 1 3/4"	D2 (PAIR)	HM	PTD	F2	HM	PTD	1/A7.2	4/A7.1	5/A7.1		
107A	BATTING CAGES	6' - 0"	7' - 0"	0' - 1 3/4"	D2 (PAIR)	HM	PTD	F2	HM	PTD	1/A7.1	2/A7.2	3/A7.2		
107B	BATTING CAGES	6' - 0"	7' - 0"	0' - 1 3/4"	D2 (PAIR)	HM	PTD	F2	HM	PTD	1/A7.1	2/A7.2	3/A7.2		
107C	BATTING CAGES	6' - 0"	7' - 0"	0' - 1 3/4"	D2 (PAIR)	HM	PTD	F2	HM	PTD	1/A7.1	2/A7.2	5/A7.1		
108	CORRIDOR	6' - 0"	7' - 0"	0' - 1 3/4"	D2 (PAIR)	HM	PTD	F2	HM	PTD					
109	UMPIRE LOCKER ROOM	3' - 0"	7' - 0"	0' - 1 3/4"	D2	HM	PTD	F1	HM	PTD	3/A7.1	4/A7.1	5/A7.1		
110	WOMENS	3' - 0"	7' - 0"	0' - 1 3/4"	D2	HM	PTD	F1	HM	PTD	3/A7.1	4/A7.1	5/A7.1		
111	JAN	3' - 0"	7' - 0"	0' - 1 3/4"	D2	HM	PTD	F1	HM	PTD	3/A7.1	4/A7.1	5/A7.1		
112	MENS	3' - 0"	7' - 0"	0' - 1 3/4"	D2	HM	PTD	F1	HM	PTD	3/A7.1	4/A7.1	5/A7.1		
113A	CONCESSION	3' - 0"	7' - 0"	0' - 1 3/4"	D2	HM	PTD	F1	HM	PTD	3/A7.1	4/A7.1	5/A7.1		
113B	CONCESSION	3' - 0"	7' - 0"	0' - 1 3/4"	D2	HM	PTD	F1	HM	PTD	1/A7.2	2/A7.1	3/A7.2	N/A	
113C	CONCESSION	7' - 0"	6' - 6"	0' - 0 1/2"	D4										REFER TO ADDITIONAL INFO ON THIS SHEET
113D	CONCESSION	7' - 0"	6' - 6"	0' - 0 1/2"	D4										REFER TO ADDITIONAL INFO ON THIS SHEET
114	PANTRY	3' - 0"	7' - 0"	0' - 1 3/4"	D2	HM	PTD	F1	HM	PTD	1/A7.1	2/A7.1	5/A7.1		
115A	MEP	3' - 0"	7' - 0"	0' - 1 3/4"	D2	HM	PTD	F1	HM	PTD	3/A7.1	4/A7.1	5/A7.1		
115B	MEP	6' - 0"	7' - 0"	0' - 1 3/4"	D2 (PAIR)	HM	PTD	F2	HM	PTD					
201	MEZZ. 1	6' - 0"	4' - 0"	0' - 1 3/4"	D2	HM	PTD	F1	HM	PTD	3/A7.1	4/A7.1			
202	MEZZ. 2	6' - 0"	4' - 0"	0' - 1 3/4"	D2	HM	PTD	F1	HM	PTD	3/A7.1	4/A7.1			

DOOR TYPES

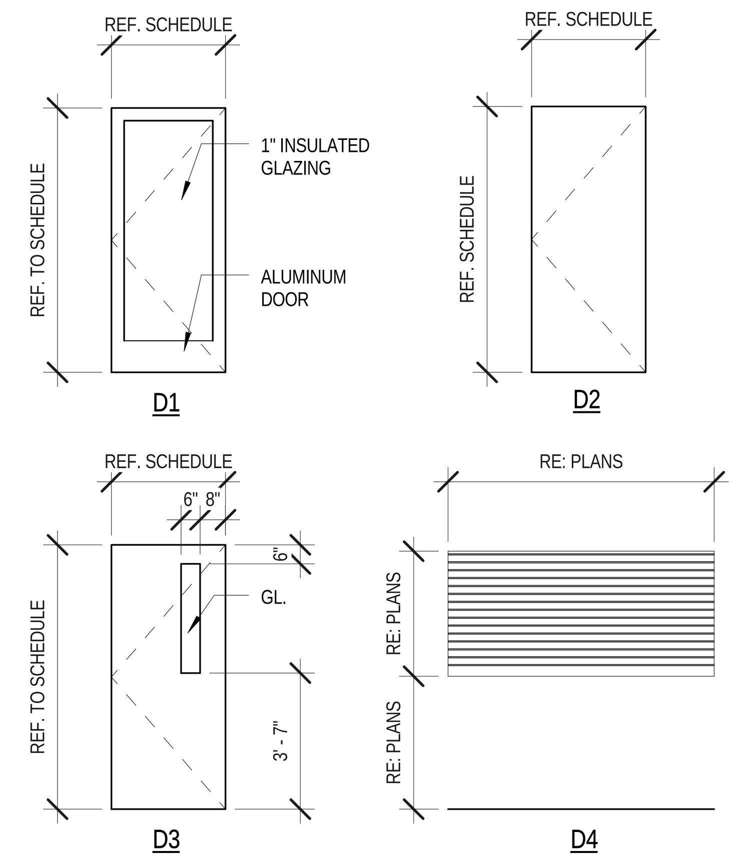

FRAME TYPES

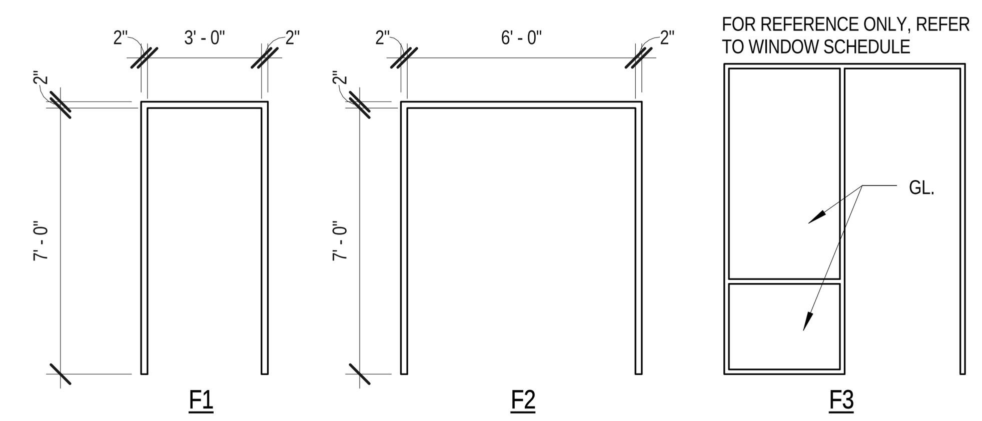

OVERHEAD COILING DOORS (# 113C & 113D)

PART 1 - GENERAL
1J. SECTION REQUIREMENTS
A. SUBMIT PRODUCT DATA & SHOP DRAWINGS.
B. DESIGN AND REINFORCE OVERHEAD COILING DOORS TO WITHSTAND A 55-MPH WIND-LOADING PRESSURE.

PART 2 - PRODUCTS
2J. OVERHEAD COILING DOORS
A. ROLLING COUNTER DOOR AT CONCESSION BY CORNELL OR EQUAL, WITH 16 GA. SLATS WITH CLEAR ANODIZED ALUMINUM FINISH. PUSH UP OPERATION, SLIDE BOLT LOCKING.
B. TRACKS, SUPPORTS, AND HARDWARE. MANUFACTURER'S STANDARD.

PART 3 - EXECUTION
3J. INSTALLATION
A. INSTALL DOORS IN STRICT CONFORMANCE TO MANUFACTURERS RECOMENDATIONS.

GENERAL NOTES

G1. PROVIDE TEMPERED GLASS PER CODE
G2. COORDINATE WITH OWNER TO CONCEAL ANY LOW VOLTAGE SECURITY WIRING WITHIN WINDOW FRAMING WHERE CONDITIONS OCCUR PRIOR TO INSTALLATION.
G3. PROVIDE INSULATED DOORS AT EXTERIOR CONDITIONS.

DOOR AND WINDOW LEGEND

AL.	ALUMINUM
CA.	CLEAR ANODIZED
GL.	GLASS
HM.	HOLLOW METAL
PT.	PAINTED

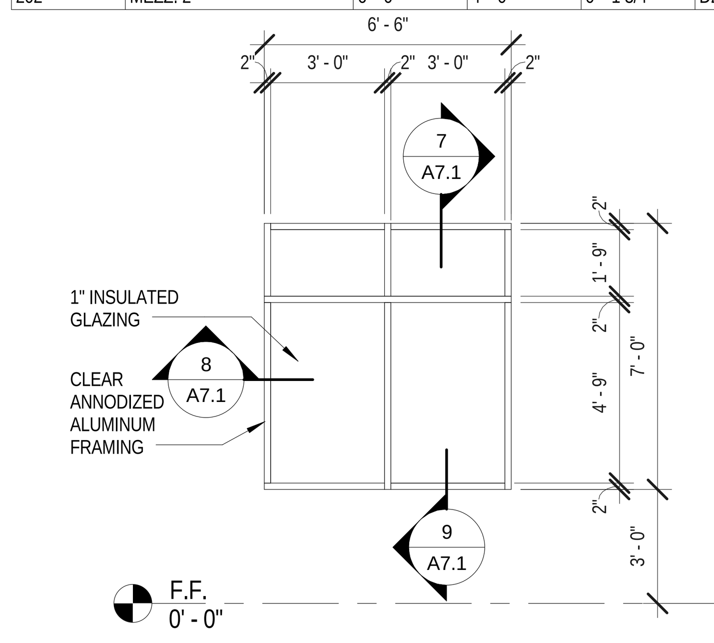

A Window Type A
1/4" = 1'-0"

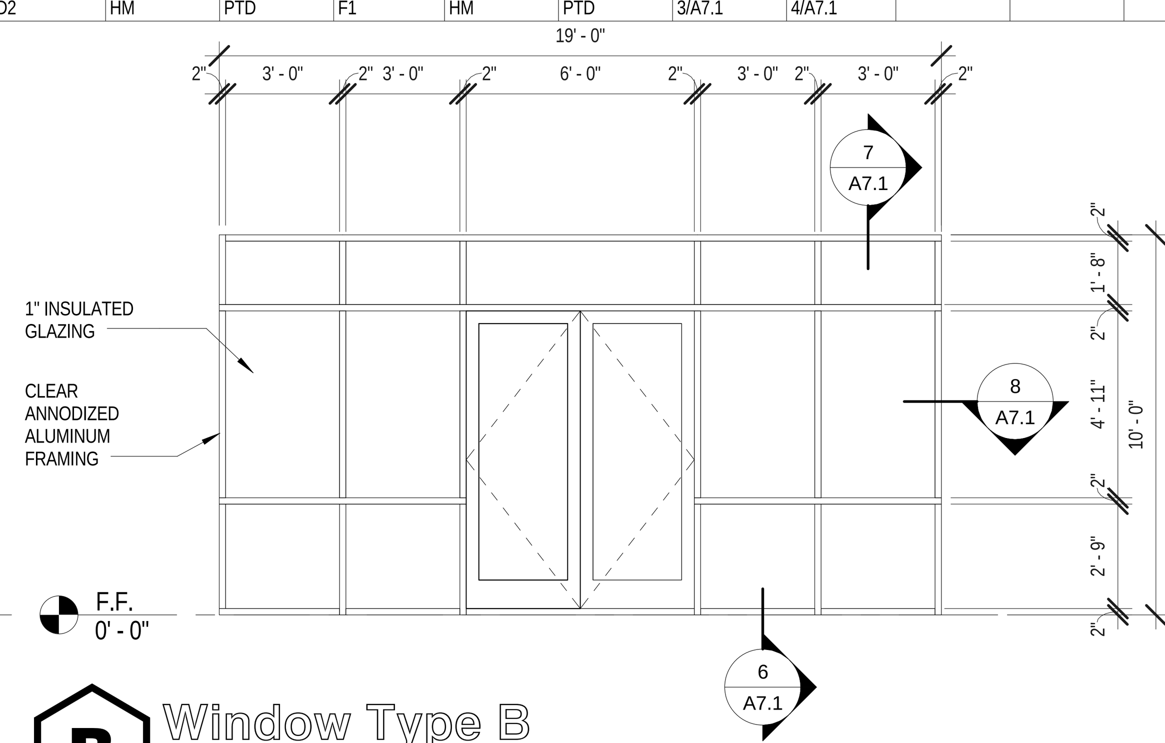

B Window Type B
1/4" = 1'-0"

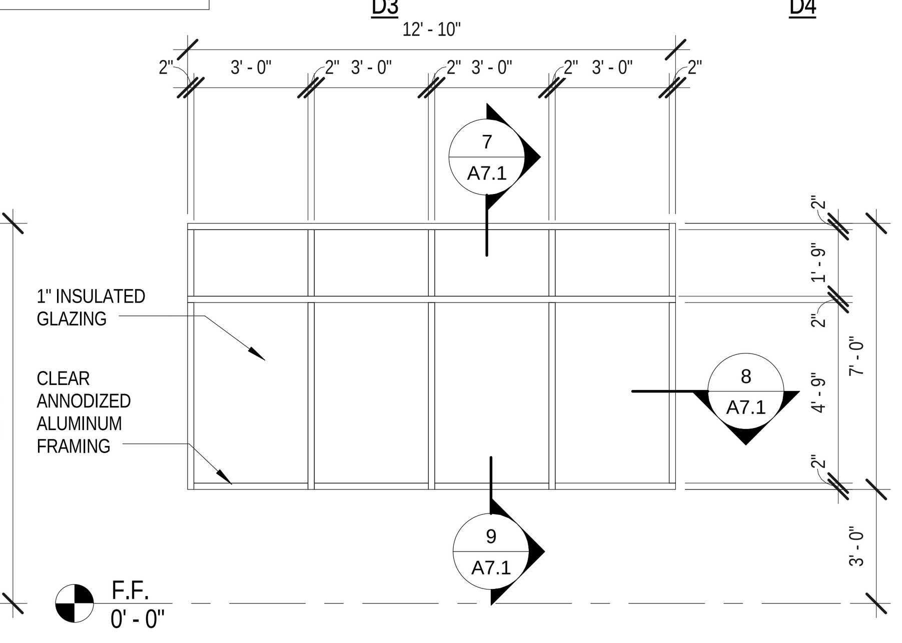

C Window Type C
1/4" = 1'-0"

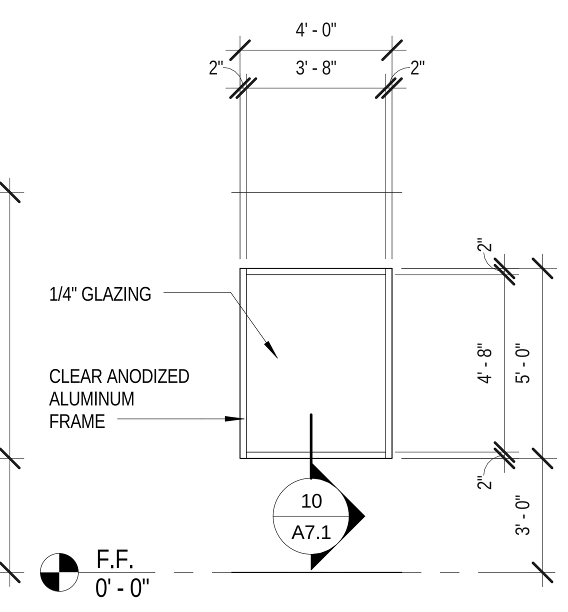

D Window Type D
1/4" = 1'-0"

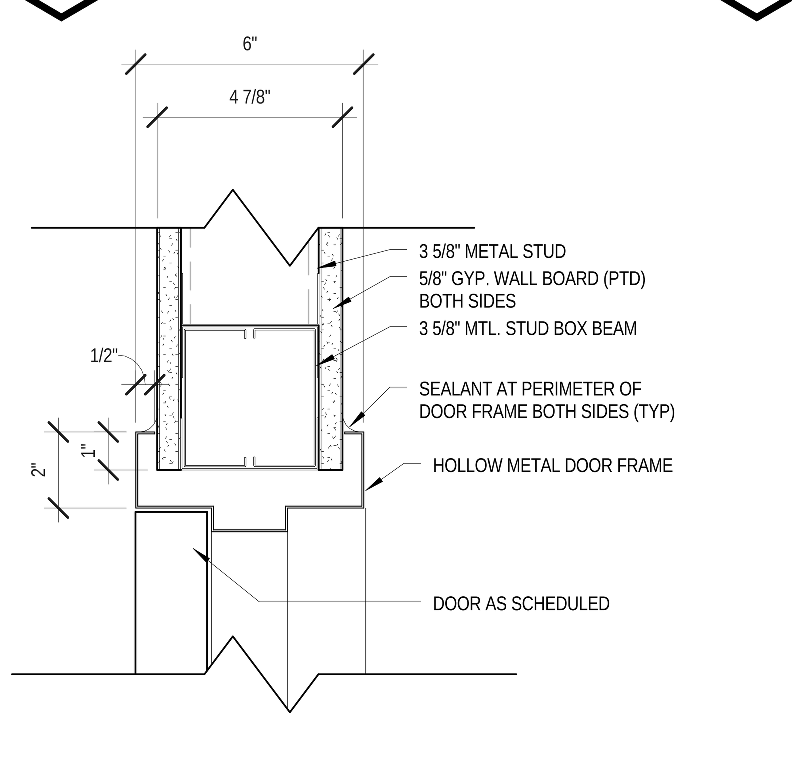

1 HM Interior Head @ 3 5/8" Stud
3" = 1'-0"

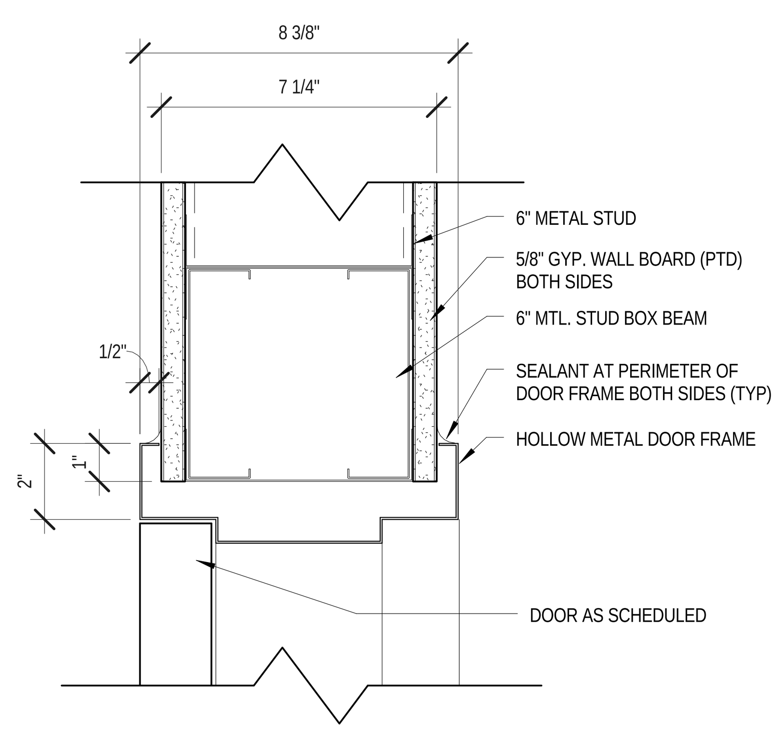

3 HM Interior Head @ 6" Stud
3" = 1'-0"

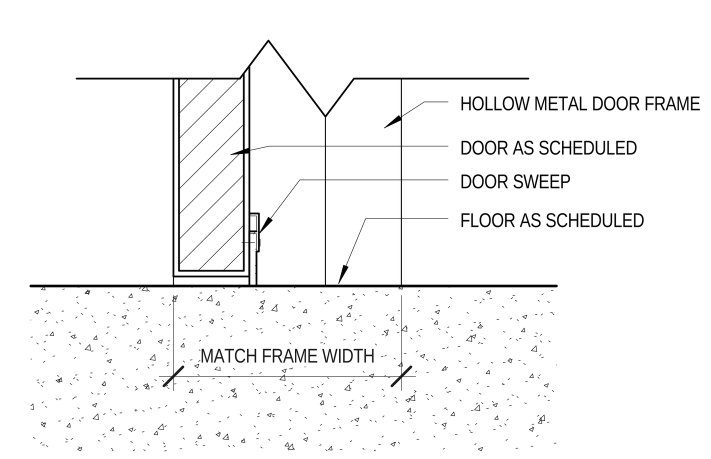

5 Threshold Detail
3" = 1'-0"

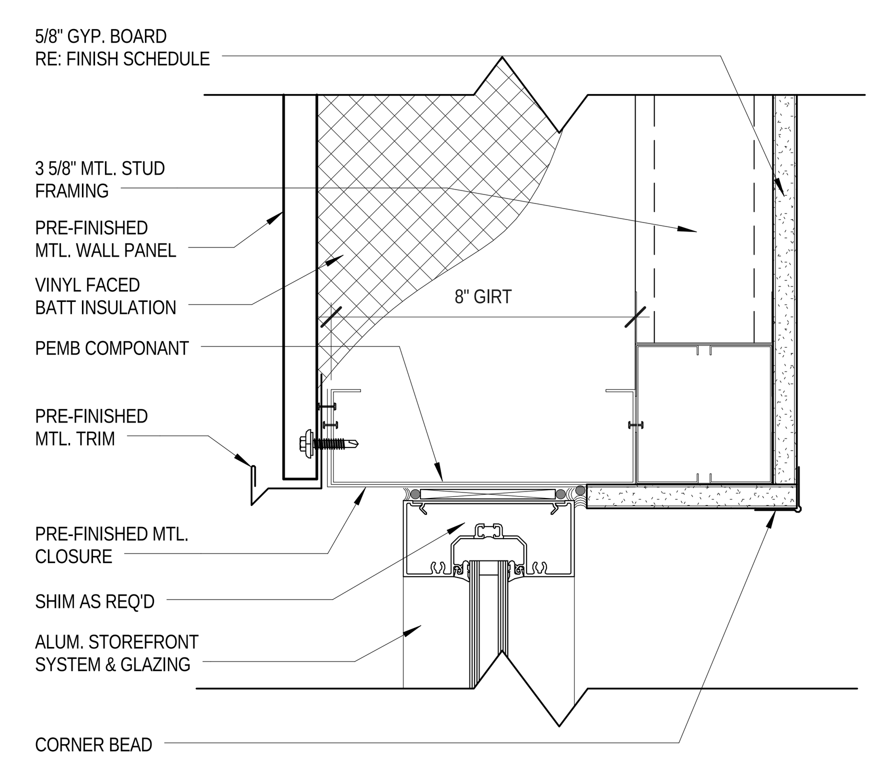

7 Storefront Head Detail
3" = 1'-0"

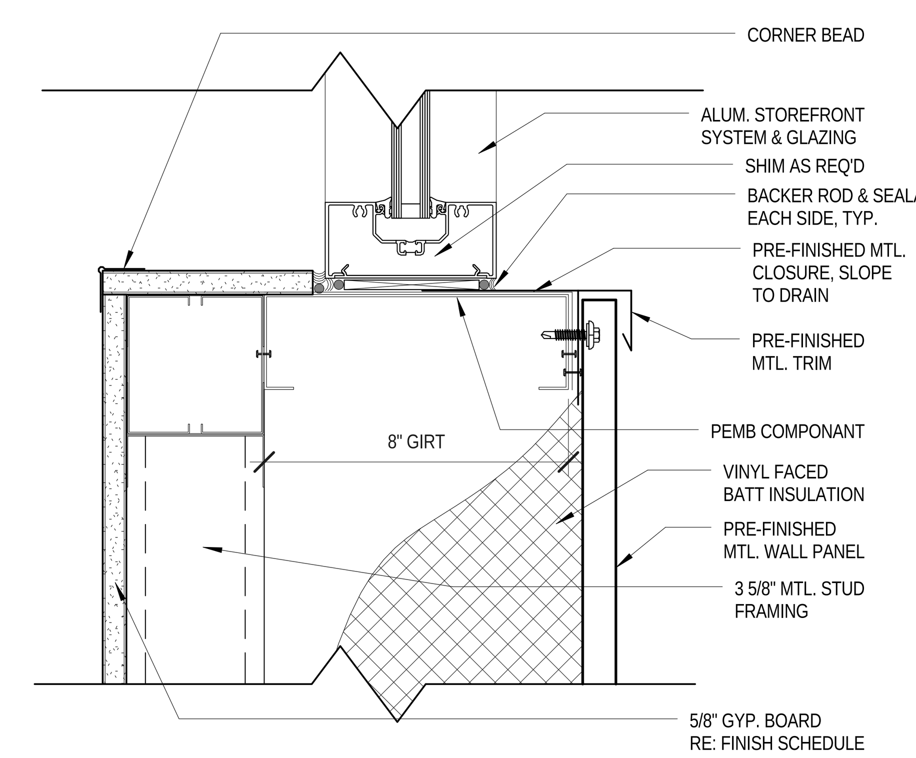

9 Storefront Sill Detail
3" = 1'-0"

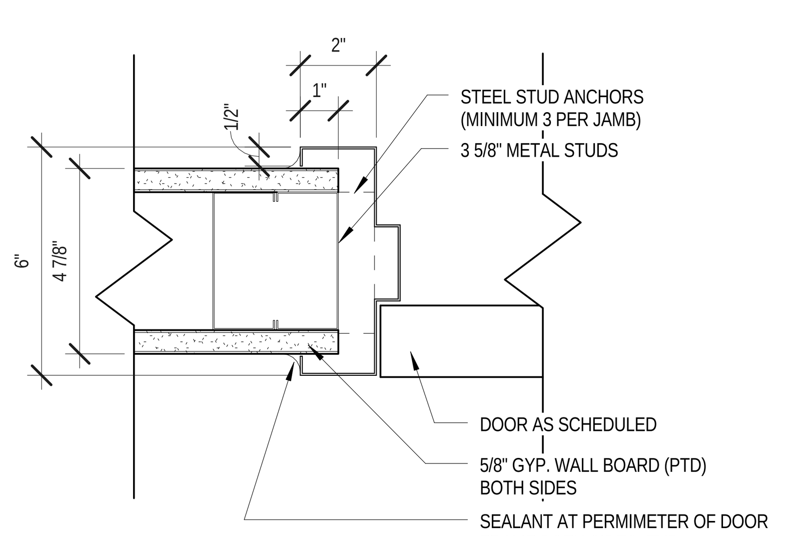

2 HM Interior Jamb @ 3 5/8" Stud
3" = 1'-0"

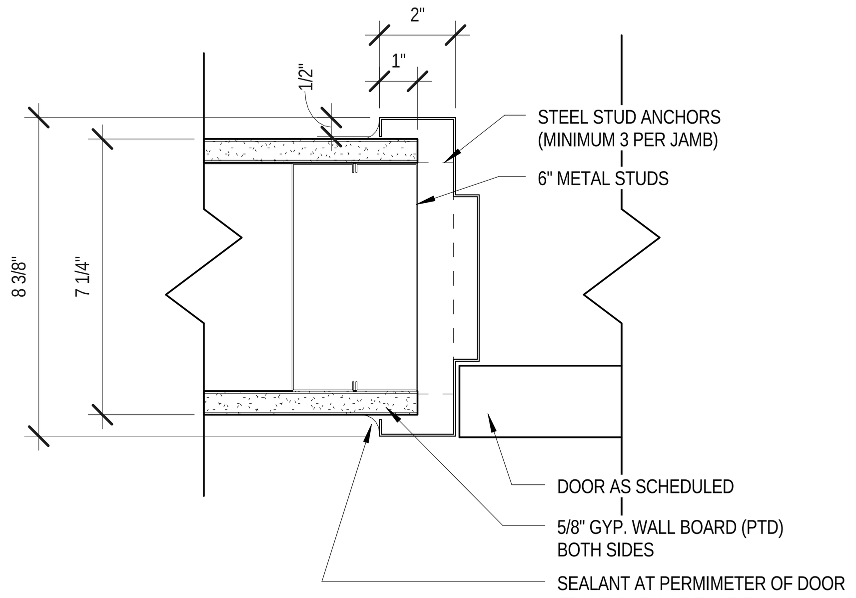

4 HM Interior Jamb @ 6" Stud
3" = 1'-0"

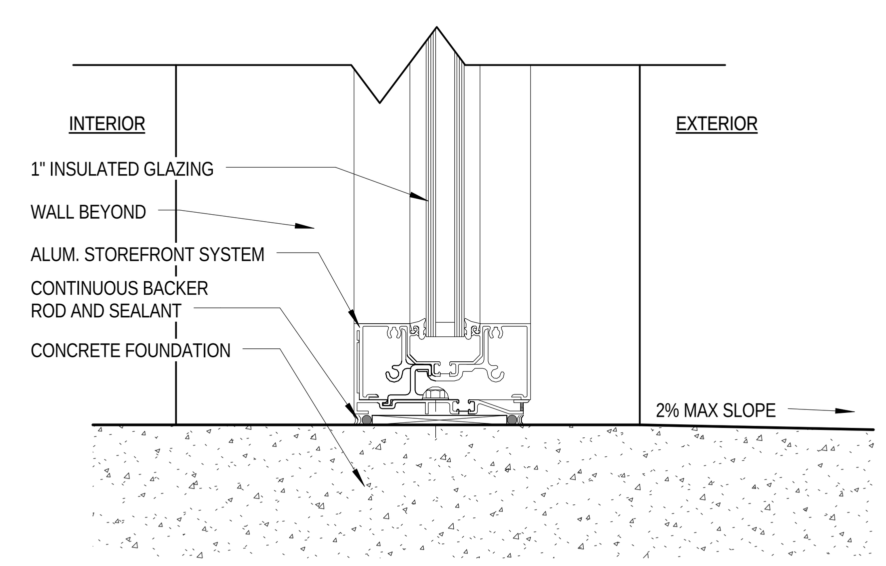

6 Storefront Sill @ Ground Condition
3" = 1'-0"

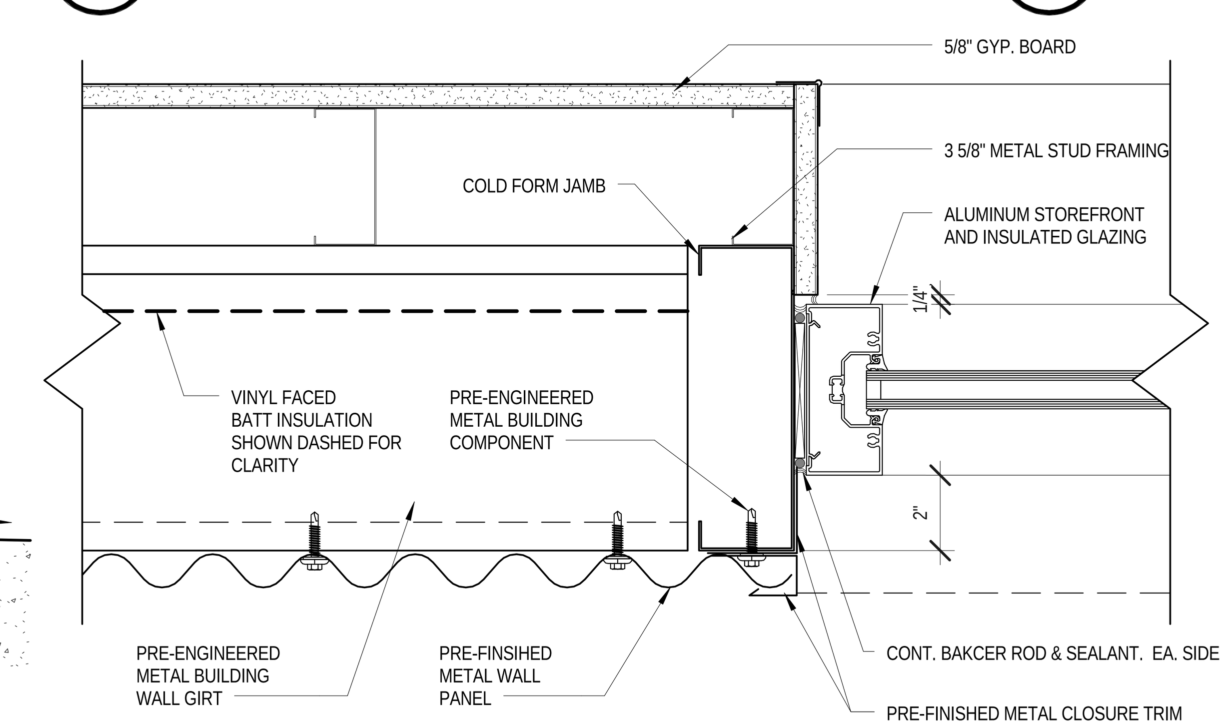

8 Storefront Jamb Detail
3" = 1'-0"

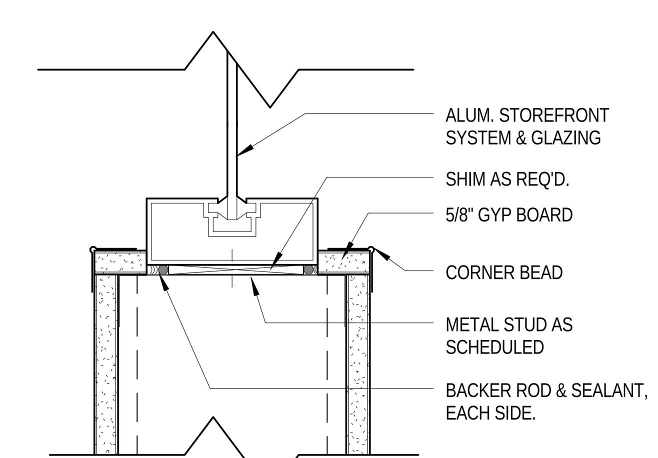

10 Interior Storefront Head, Jamb, & Sill
3" = 1'-0"

10/26/2016 9:24:31 AM

REVISIONS

NO.	DESCRIPTION	DATE

PETER LEWIS
ARCHITECT + ASSOCIATES
334 West Water Street
Kerrville, TX 78028
(830) 896-4220
(830) 896-4226
www.pwlarchitect.com

REGISTERED ARCHITECT PETER W LEWIS 08295 STATE OF TEXAS
10/21/16

City of Kerrville Athletic Complex Field House

Kerrville, Texas

NOT PUBLISHED. ALL RIGHTS RESERVED BY THE ARCHITECT. DRAWINGS AND SPECIFICATIONS AS INSTRUMENTS OF SERVICE ARE AND SHALL REMAIN THE PROPERTY OF THE ARCHITECT. THEY SHALL NOT BE USED ON OTHER PROJECTS OR EXTENSIONS TO THIS PROJECT EXCEPT BY AGREEMENT IN WRITING AND WITH APPROPRIATE COMPENSATION TO THE ARCHITECT. CONTRACTOR IS RESPONSIBILE FOR THE CONFIRMING AND CORRELATING DIMENSIONS AT JOB SITE, THE ARCHITECT WILL NOT BE RESPONSIBLE FOR CONSTRUCTION MEANS, METHODS, TECHNIQUES, SEQUENCES OR FOR SAFETY PRECAUTIONS AND PROGRAMS IN CONNECTION WITH THE PROJECT.

PROJECT NO.	DATE
20-1605	10/21/16

Door and Window Schedules

SHEET NUMBER

A7.1

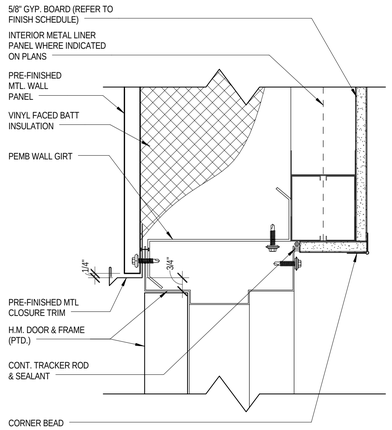

1 Head Detail @ H.M. Door (PEMB)
3" = 1'-0"

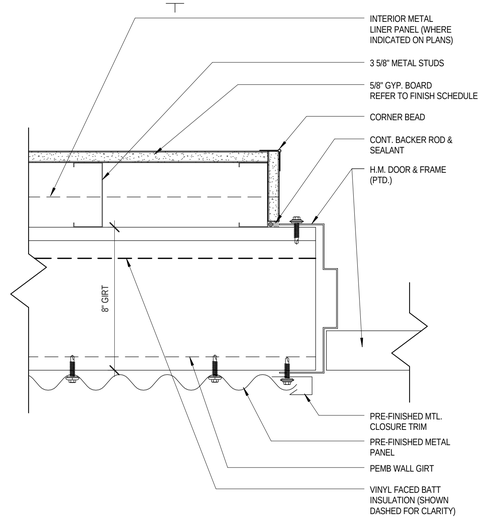

2 Jamb Detail @ H.M. Door (PEMB)
3" = 1'-0"

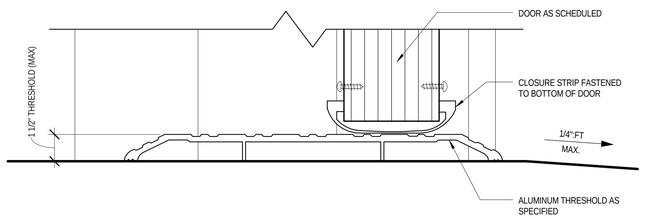

3 Exterior Door Sill
3" = 1'-0"

REVISIONS

NO.	DESCRIPTION	DATE

PETER LEWIS
ARCHITECT + ASSOCIATES

334 West Water Street
Kerrville, TX 78028
(830) 896-4220
(830) 896-4226
www.pwlarchitect.com

10/21/16

CITY OF KERRVILLE 1889 TEXAS

City of Kerrville Athletic Complex Field House

Kerrville, Texas

NOT PUBLISHED. ALL RIGHTS RESERVED BY THE ARCHITECT. DRAWINGS AND SPECIFICATIONS AS INSTRUMENTS OF SERVICE ARE AND SHALL REMAIN THE PROPERTY OF THE ARCHITECT. THEY SHALL NOT BE USED ON OTHER PROJECTS OR EXTENSIONS TO THIS PROJECT EXCEPT BY AGREEMENT IN WRITING AND WITH APPROPRIATE COMPENSATION TO THE ARCHITECT. CONTRACTOR IS RESPONSIBLE FOR THE CONFIRMING AND CORRELATING DIMENSIONS AT JOB SITE. THE ARCHITECT WILL NOT BE RESPONSIBLE FOR CONSTRUCTION MEANS, METHODS, TECHNIQUES, SEQUENCES OR FOR SAFETY PRECAUTIONS AND PROGRAMS IN CONNECTION WITH THE PROJECT.

PROJECT NO.	DATE
20-1605	10/21/16

Door & Window Details

SHEET NUMBER

A7.2

10/26/2016 9:24:33 AM

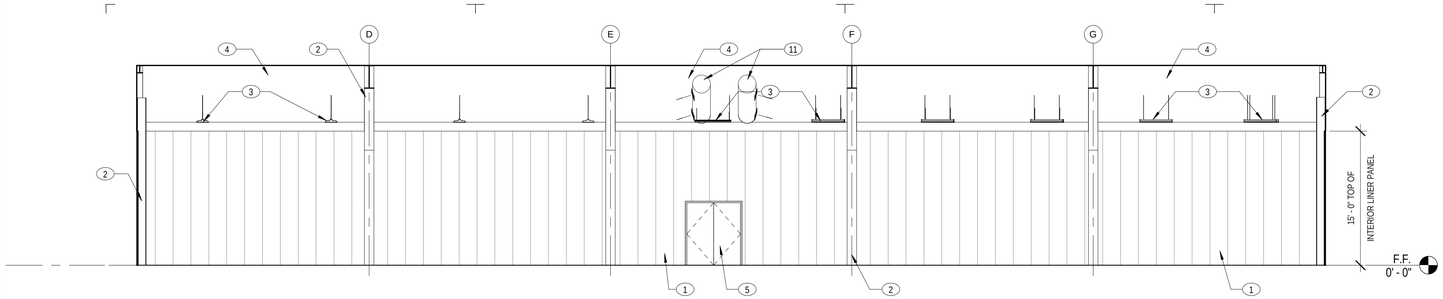

1 Batting Cages North Elev.

1/8" = 1'-0"

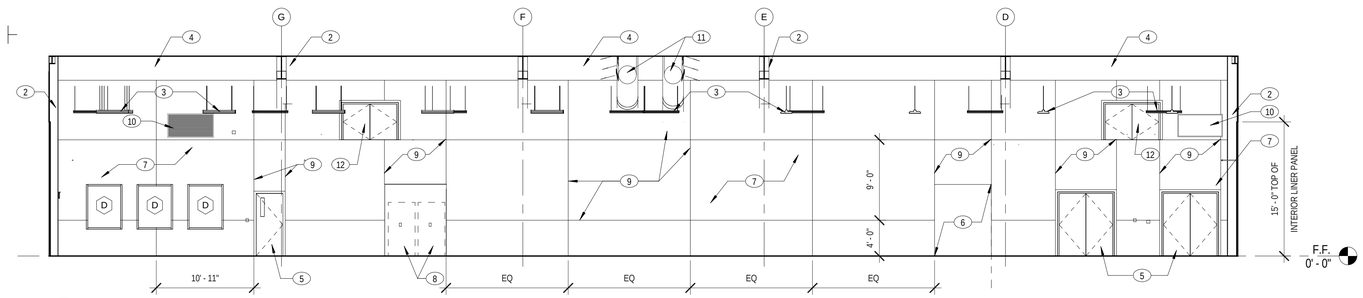

2 Batting Cages South Elev.

1/8" = 1'-0"

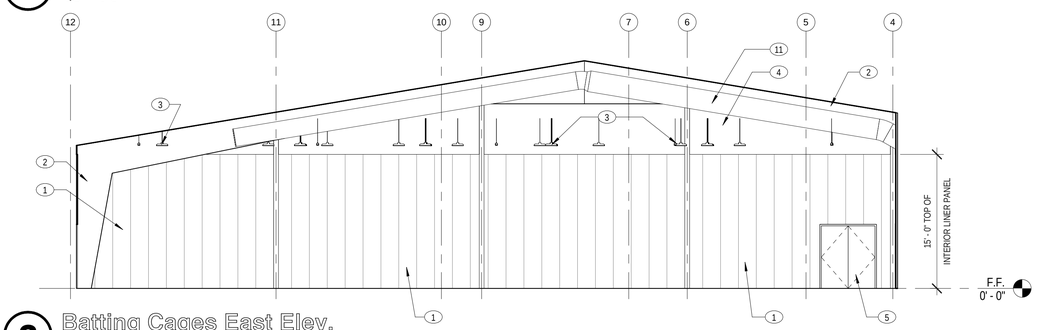

3 Batting Cages East Elev.

1/8" = 1'-0"

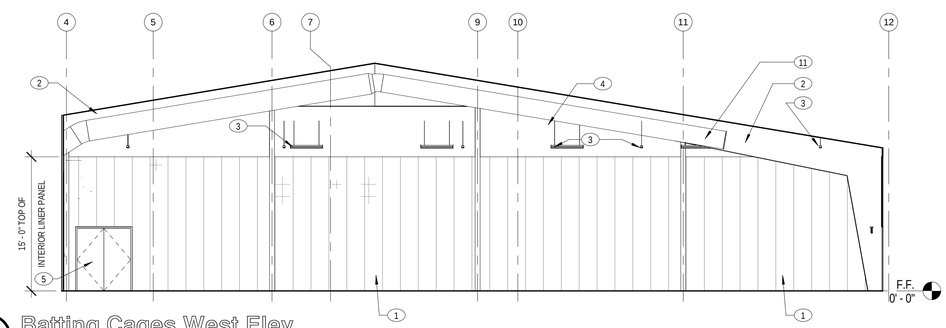

4 Batting Cages West Elev.

1/8" = 1'-0"

10/26/2016 9:24:35 AM

GENERAL NOTES:

1. ALL MILLWORK TO BE PLAIN SLICED MAPLE UNLESS OTHERWISE NOTED.
2. ALL KEY NOTES TYPICAL.
3. PROVIDE SHOP DRAWINGS FOR ALL MILLWORK.

KEY NOTES:

1. INTERIOR PRE-FINISHED METAL LINER PANEL.
2. PRE-ENGINEERED METAL BUILDING FRAME. (PRIMED)
3. LIGHT FIXTURES. RE: ELECTRICAL.
4. VINYL FACED INSULATION.
5. HOLLOW METAL DOOR & FRAME. (PTD.)
6. OPEN TO BEYOND.
7. GYP. BOARD WALL. TAPE, FLOAT, & PRIME ONLY. FINAL TEXTURE PAINT NOT IN CONTRACT.
8. VENDING MACHINE. BY OTHER.
9. CONTROL JOINT. (TYP.)
10. MECH. LOUVER. RE: MECH.
11. MECH. DUCT. RE: MECH.
12. MECH. PLATFORM ACCESS DOORS.

REVISIONS

NO.	DESCRIPTION	DATE

PETER LEWIS
ARCHITECT + ASSOCIATES

334 West Water Street
Kerrville, TX 78028
(830) 896-4220
(830) 896-4226
www.pwlarchitect.com

REGISTERED ARCHITECT PETER W. LEWIS 18259 STATE OF TEXAS

10/21/16

CITY OF KERRVILLE 1889 TEXAS

City of Kerrville Athletic Complex Field House

Kerrville, Texas

NOT PUBLISHED. ALL RIGHTS RESERVED BY THE ARCHITECT. DRAWINGS AND SPECIFICATIONS AS INSTRUMENTS OF SERVICE ARE AND SHALL REMAIN THE PROPERTY OF THE ARCHITECT. THEY SHALL NOT BE USED ON OTHER PROJECTS OR EXTENSIONS TO THIS PROJECT EXCEPT BY AGREEMENT IN WRITING AND WITH APPROPRIATE COMPENSATION TO THE ARCHITECT. THE CONTRACTOR SHALL VERIFY AND BE RESPONSIBLE FOR CONFIRMING AND CORRELATING DIMENSIONS AT JOB SITE. THE ARCHITECT WILL NOT BE RESPONSIBLE FOR CONSTRUCTION MEANS, METHODS, TECHNIQUES, SEQUENCES OR FOR SAFETY PRECAUTIONS AND PROGRAMS IN CONNECTION WITH THE PROJECT.

PROJECT NO.	DATE
20-1605	10/21/16

Interior Elevations

SHEET NUMBER

A8.1

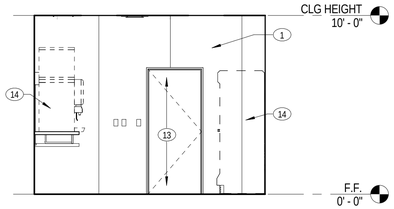

1 Concession North Elev.
1/4" = 1'-0"

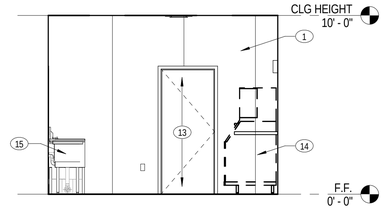

2 Concession South Elev.
1/4" = 1'-0"

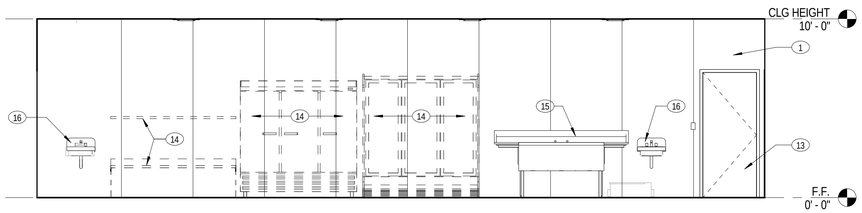

3 Concession East Elev.
1/4" = 1'-0"

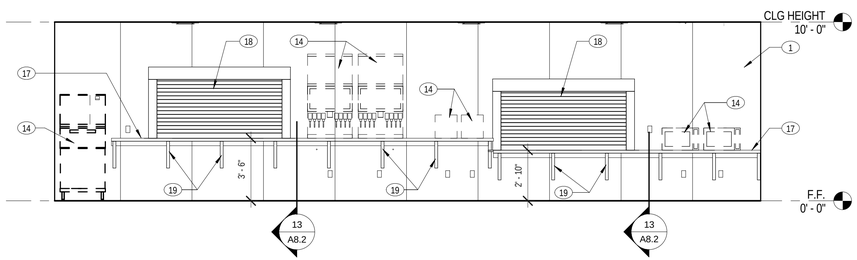

4 Concession West Elev.
1/4" = 1'-0"

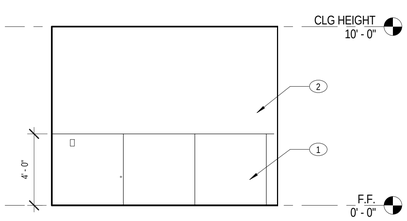

5 Men's North Elev.
1/4" = 1'-0"

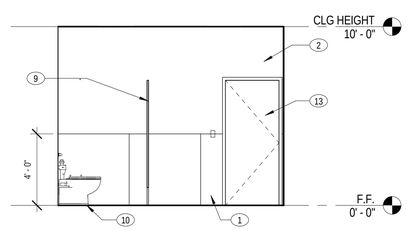

6 Men's South Elev.
1/4" = 1'-0"

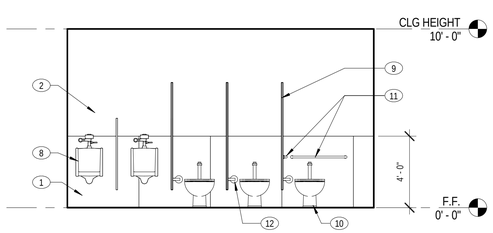

7 Men's East Elev.
1/4" = 1'-0"

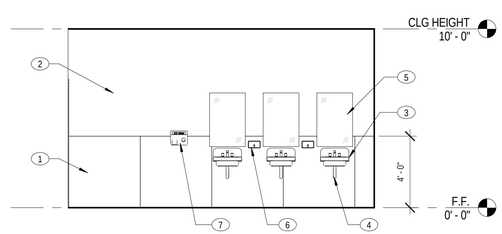

8 Men's West Elev.
1/4" = 1'-0"

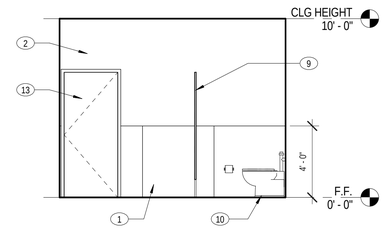

9 Women's North Elev.
1/4" = 1'-0"

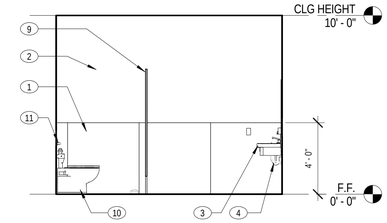

10 Women's South Elev.
1/4" = 1'-0"

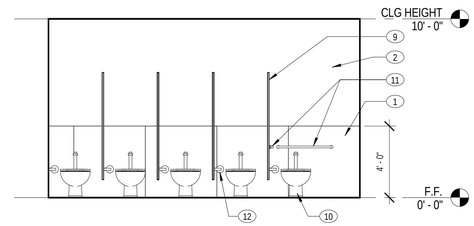

11 Women's East Elev.
1/4" = 1'-0"

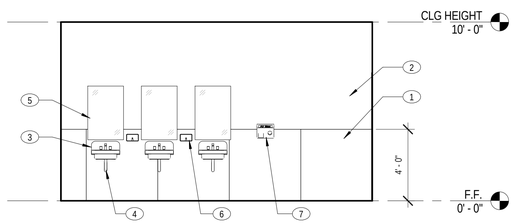

12 Women's West Elev.
1/4" = 1'-0"

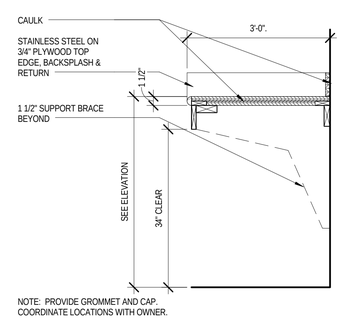

13 S.S. Counter
1" = 1'-0"

GENERAL NOTES:

1. REFER TO SHEET A2.3 FOR TOILET ACCESSORIES.
2. REFER TO SHEET G1.2 FOR STANDARD ADA/TAS MOUNTING HEIGHTS & CLEARANCES.

KEY NOTES:

1. MARLITE BRAND (OR APPROVED EQUAL) FRP PANEL.
2. EXPOXY PAINTED MOISTURE RESISTANT GYPSUM WALL BOARD.
3. WALL MOUNTED LAVATORY. RE: PLUMBING. (TYP.)
4. INSULATED PIPES. (TYP.)
5. 24"X36" WALL MOUNTED MIRROR. RE: SPECIALTIES.
6. SURFACE MOUNTED SOAP DISPENSER. RE: SPECIALTIES.
7. SURFACE MOUNTED ELECTRIC HAND DRYER. RE: ELECTRICAL. RE: SPECIALTIES.
8. URINAL. RE: PLUMBING.
9. TOILET COMPARTMENT.
10. WATER CLOSET. RE: PLUMBING.
11. GRAB BAR. RE: SPECIALTIES.
12. TOILET PAPER DISPENSER. RE: SPECIALTIES.
13. HOLLOW METAL DOOR & FRAME. (PTD.)
14. KITCHEN EQUIPMENT. (NIC) RE: 1/A2.3
15. THREE COMPARTMENT SINK.
16. HAND SINK.
17. STAINLESS STEEL COUNTERTOP.
18. INSULATED OVERHEAD GRILL.
19. 1 1/2" SUPPORT BRACE

REVISIONS

NO.	DESCRIPTION	DATE

PETER LEWIS
ARCHITECT + ASSOCIATES
334 West Water Street
Kerrville, TX 78028
(830) 896-4220
(830) 896-4226
www.pwlarchitect.com

REGISTERED ARCHITECT PETER W. LEWIS 18259 STATE OF TEXAS

10/21/16

CITY OF KERRVILLE 1889 TEXAS

City of Kerrville Athletic Complex Field House
Kerrville, Texas

NOT PUBLISHED. ALL RIGHTS RESERVED BY THE ARCHITECT. DRAWINGS AND SPECIFICATIONS AS INSTRUMENTS OF SERVICE ARE AND SHALL REMAIN THE PROPERTY OF THE ARCHITECT WHO PLANNED THEM. THEY ARE NOT TO BE USED BY ANY PERSON ON ANY OTHER PROJECT EXCEPT BY AGREEMENT IN WRITING AND WITH APPROPRIATE COMPENSATION TO THE ARCHITECT. CONTRACTOR IS RESPONSIBLE FOR THE CONFIRMING AND CORRELATING DIMENSIONS AT JOB SITE. THE ARCHITECT WILL NOT BE RESPONSIBLE FOR CONSTRUCTION MEANS, METHODS, TECHNIQUES, SEQUENCES OR FOR SAFETY PRECAUTIONS AND PROGRAMS IN CONNECTION WITH THE PROJECT.

PROJECT NO.	DATE
20-1605	10/21/16

Interior Elevations

SHEET NUMBER

A8.2

10/26/2016 9:24:39 AM

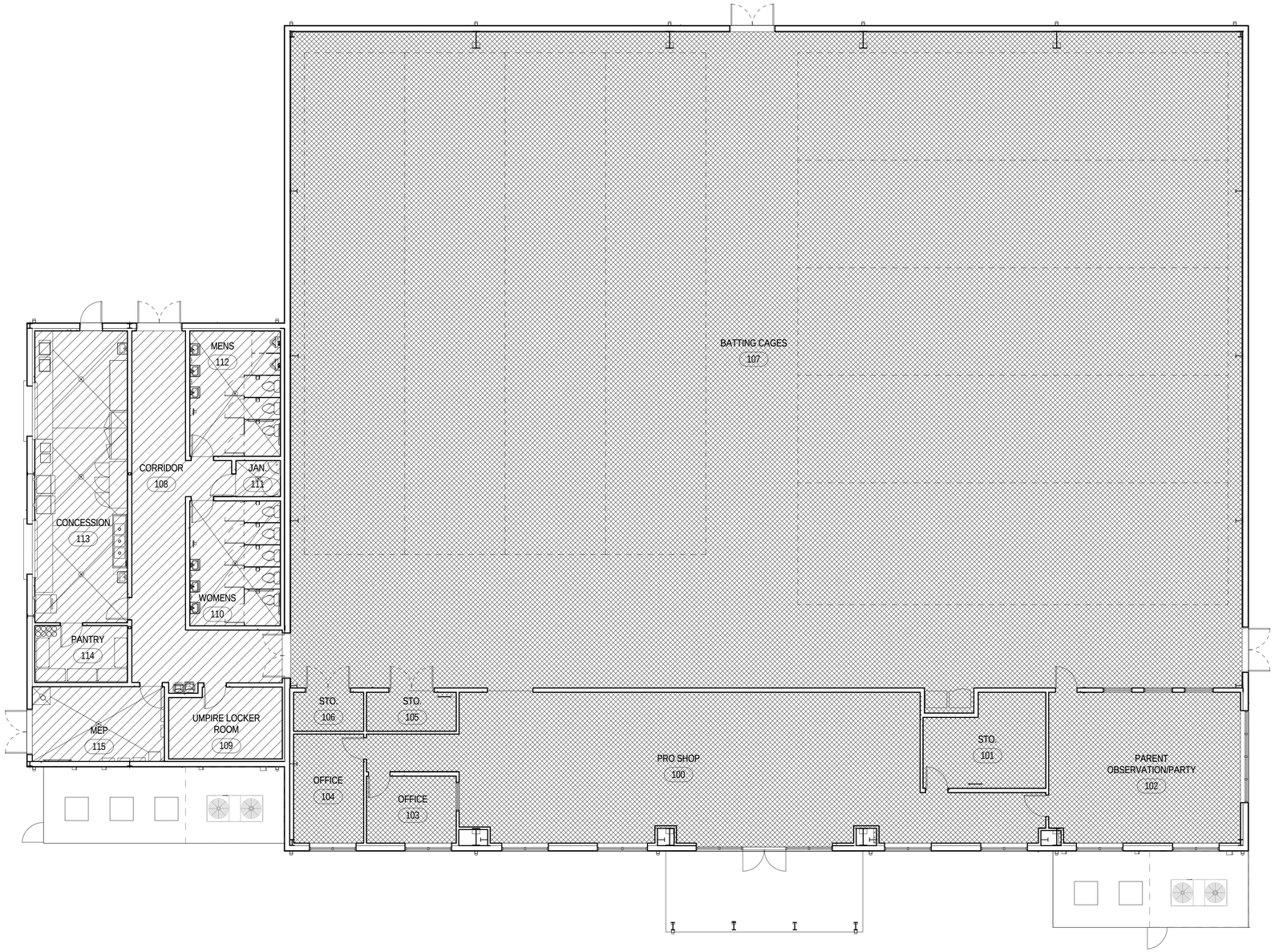

1 Finishes Plan
1/8" = 1'-0"

ROOM FINISH SCHEDULE									
		FLOOR		WALLS				CEILING	
ROOM NUMBER	NAME	FINISH	BASE	NORTH	EAST	SOUTH	WEST	FINISH	COMMENTS
100	PRO SHOP	F2	-	TF1	TF1	TF1	TF1	ACT1	
101	STO.	F2	-	TF1	TF1	TF1	TF1	ACT1	
102	PARENT OBSERVATION/PARTY	F2	-	TF1	TF1	TF1	TF1	ACT1	
103	OFFICE	F2	-	TF1	TF1	TF1	TF1	ACT1	
104	OFFICE	F2	-	TF1	TF1	TF1	TF1	ACT1	
105	STO.	F2	-	TF1	TF1	TF1	TF1	ACT1	
106	STO.	F2	-	TF1	TF1	TF1	TF1	ACT1	
107	BATTING CAGES	F2	-	ILP1	ILP1	ILP1	TF1	EXPOSED	
108	CORRIDOR	F1	RB1	P1	P1	P1	P1	ACT1	
109	UMPIRE LOCKER ROOM	F1	RB1	P1	P1	P1	P1	ACT1	
110	WOMENS	F1	-	FRP/P1	FRP/P1	FRP/P1	FRP/P1	ACT2	
111	JAN.	F1	RB1	P1	P1	P1	P1	EXPOSED	
112	MENS	F1	-	FRP/P1	FRP/P1	FRP/P1	FRP/P1	ACT2	
113	CONCESSION	F1	-	FRP	FRP	FRP	FRP	ACT2	
114	PANTRY	F1	-	FRP	FRP	FRP	FRP	ACT2	
115	MEP	F1	-	PLY1/P1	PLY1/P1	PLY1	PLY1	EXPOSED	
201	Mezz. 1	PLY 1		TF1	TF1	TF1	TF1	EXPOSED	
202	Mezz. 2	PLY 1		TF1	TF1	TF1	TF1	EXPOSED	

GENERAL NOTES:

1. FINISHED LISTED ARE FOR PRICING ONLY. ALL FINAL FINISHES TO BE SELECTED AND CONFIRMED BY OWNER PRIOR TO PURCHASE, FABRICATION OR INSTALLATION.
2. FLOOR TRANSITIONS AT CENTERLINE OF DOOR UNLESS NOTED OTHERWISE.
3. PAINT ALL EXPOSED PANEL BOXES AND PHONE BOARDS TO MATCH WALL.
4. ALL OUTLETS, SWITCHES AND COVER PLATES TO MATCH HARDWARE.
5. EPOXY PAINT WALLS IN WET ROOMS WHERE SCHEDULED.
6. PROVIDE 60" HIGH FIBERGLASS REINFORCED PLASTIC (FRP) TO FACE OF MOP SINK WALLS WITH TRANSITION STRIP.
7. PAINT WALL GRILLES TO MATCH WALL @ GYP BD. WALLS.

FLOORING:

F1. SEALED CONCRETE

F2. FUTURE FLOOR FINISH (NOT IN CONTRACT)

GENERAL FINISH NOTES:

1. FINISHES LISTED ARE FOR PRICING ONLY. ALL FINAL FINISHES TO BE SELECTED AND CONFIRMED BY OWNER PRIOR TO PURCHASE, FABRICATION OR INSTALLATION.
2. FLOOR TRANSITIONS AT CENTERLINE OF DOOR UNLESS NOTED OTHERWISE.
3. PAINT ALL EXPOSED PANEL BOXES AND PHONE BOARDS TO MATCH WALL.
4. ALL OUTLETS, SWITCHES AND COVER PLATES TO MATCH HARDWARE.
5. EPOXY PAINT WALLS IN WET ROOMS WHERE SCHEDULED.
6. WALL GRILLS TO MATCH HARDWARE.
7. ALL METAL TRANSITION STRIPS TO MATCH HARDWARE.

BASE AND TRIM

RB1 - 4" RUBBER BASE
MFG: ROPPE
COLOR: 147 LIGHT BROWN

PAINT:

LIGHT ORANGE PEEL @ ALL PAINTED GYP CONDITIONS

P1 - PAINT
MFG: SHERWIN WILLIAMS
COLOR: BELIEVABLE BUFF
NOTES:

FIBER REINFORCED PLASTIC PANEL:

FRP
MFG: MARLITE BRAND FRP PANELS, 3/32A THICK FIBERGLASS REINFORCED PANELS
COLOR: STANDARD P-100-WHITE, FRP PANELS

CEILINGS:

ACT1 - ALL SUSPENDED ACOUSTICAL CEILING -
2X2 ARMSTRONG CORTEGA #704 - TEGULAR IN DONN DX GRID

ACT2 - VINYL FACED ACOUSTICAL CEILING -
2X2 ARMSTRONG CONTRACT INTERIORS #1728, SQUARE EDGE CEILING TILE

CONCRETE:

CONC 1 - SEALED CONCRETE

TAPE & FLOAT:

TF1 - TAPE & FLOAT EXPOSED GYP ONLY. TEXTURE & PAINT BY OTHERS.

INTERIOR LINER PANEL

ILP1
MFG: IL-240-0 24" X 1 1/2" 24 GA. OR APPROVED EQ.
COLOR: TO BE DETERMINED FROM MANUFACTURERS STANDARD COLORS
NOTES: EXTENDED TO FROM F.F. TO 15'-0" A.F.F.

PLYWOOD

PLY1
3/4" UNFINISHED FIRE RESISTANT PLYWOOD FROM F.F. TO 8'-0" A.F.F.

REVISIONS

NO.	DESCRIPTION	DATE

PETER LEWIS
ARCHITECT + ASSOCIATES
334 West Water Street
Kerrville, TX 78028
(830) 896-4220
(830) 896-4226
www.pwlarchitect.com

REGISTERED ARCHITECT PETER W. LEWIS 18295 STATE OF TEXAS

10/21/16

CITY OF KERRVILLE 1889 TEXAS

City of Kerrville Athletic Complex Field House

Kerrville, Texas

NOT PUBLISHED. ALL RIGHTS RESERVED BY THE ARCHITECT. DRAWINGS AND SPECIFICATIONS AS INSTRUMENTS OF SERVICE ARE AND SHALL REMAIN THE PROPERTY OF THE ARCHITECT. THEY SHALL NOT BE USED ON OTHER PROJECTS OR EXTENSIONS TO THIS PROJECT, EXCEPT BY AGREEMENT IN WRITING AND APPROPRIATE COMPENSATION TO THE ARCHITECT. CONTRACTOR IS RESPONSIBLE FOR THE CONFIRMING AND CORRELATING DIMENSIONS AT JOB SITE. THE ARCHITECT WILL NOT BE RESPONSIBLE FOR CONSTRUCTION MEANS, METHODS, TECHNIQUES, SEQUENCES OR FOR SAFETY PRECAUTIONS AND PROGRAMS IN CONNECTION WITH THE PROJECT.

PROJECT NO. 20-1605
DATE 10/21/16

Finishes Plan & Schedule

SHEET NUMBER
A9.1

10/26/2016 9:24:41 AM

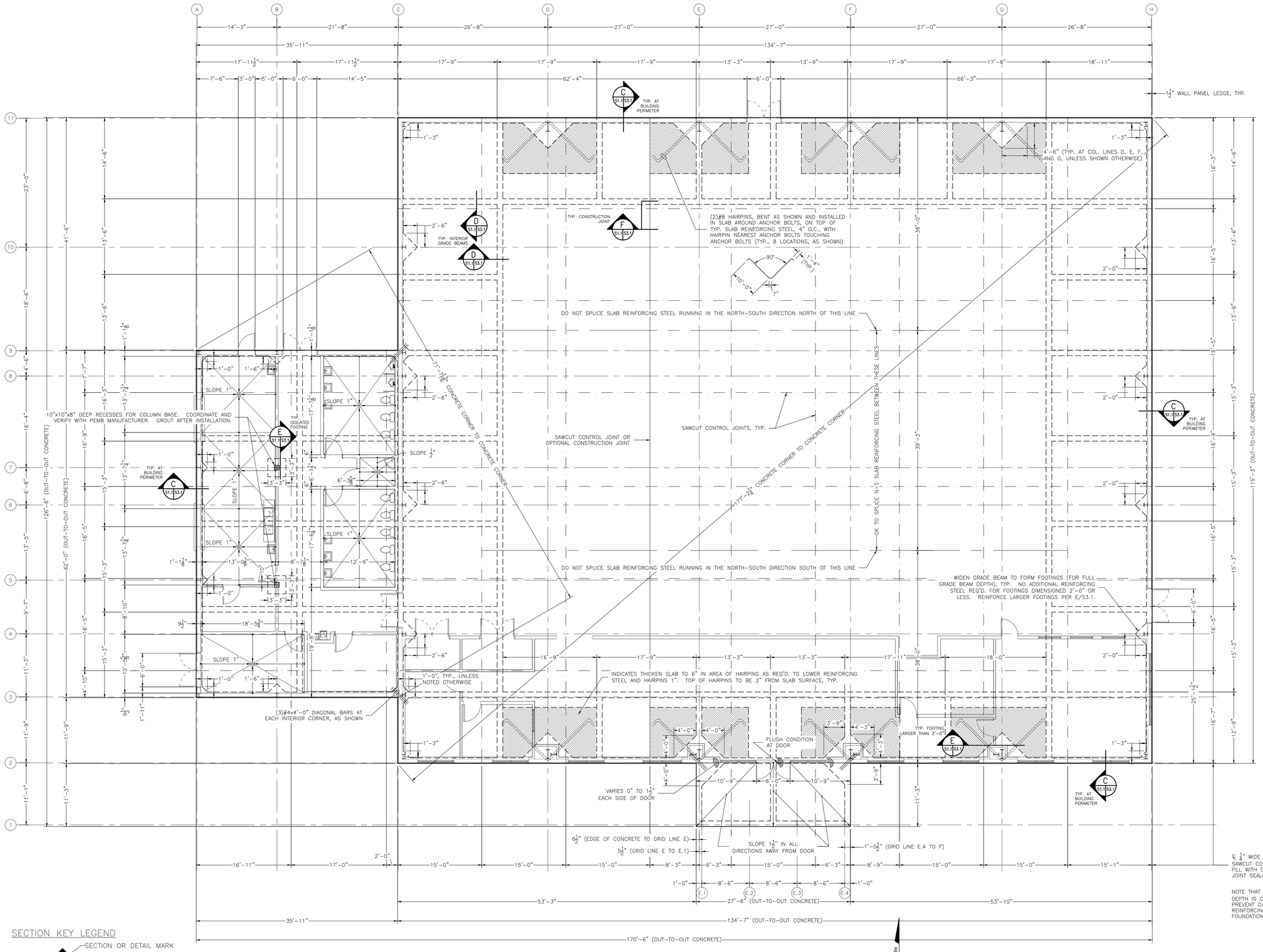

℄ ¼" WIDE × 1¼" DEEP SAWCUT CONTROL JOINTS. FILL WITH SELF–LEVELING JOINT SEALANT.

NOTE THAT 1¼" JOINT DEPTH IS CRITICAL TO PREVENT CUTTING OF REINFORCING STEEL AND FOUNDATION FAILURE.

NOTE: REF. A/S3.1 FOR TYPICAL DUGOUT FOUNDATION PLAN.

SECTION KEY LEGEND

SECTION OR DETAIL MARK

SHEET NUMBER WHERE SECTION OR DETAIL IS TAKEN

SHEET NUMBER WHERE SECTION OR DETAIL IS DRAWN

A FOUNDATION PLAN – FIELD HOUSE

A / S1.1

SCALE: 1/8" = 1'–0"

REVISIONS

NO.	DESCRIPTION	DATE

PETER LEWIS ARCHITECT + ASSOCIATES
334 West Water Street Kerrville, TX 78028
(830) 896–4220 Fax (830) 896–4226
www.pwlarchitect.com

MAXWELL ENGINEERING, PLLC
Structural | Geotechnical | Civil | Forensic
Since 1999 • Texas Registered Engineering Firm F-943
911 Panorama Drive • Kerrville, Texas 78028
Office 830.895.0032 • maxengpllc.com

STATE OF TEXAS
JIM MAXWELL
80643
REGISTERED PROFESSIONAL ENGINEER

THE SEAL APPEARING ON THIS DRAWING WAS AUTHORIZED BY JIM MAXWELL, P.E. ON OCTOBER 21, 2016.

CITY OF KERRVILLE 1889 TEXAS

City of Kerrville Athletic Complex Field House

Kerrville, Texas

NOT PUBLISHED. ALL RIGHTS RESERVED BY THE ARCHITECT. DRAWINGS AND SPECIFICATIONS AS INSTRUMENTS OF SERVICE ARE AND SHALL REMAIN THE PROPERTY OF THE ARCHITECT. THEY SHALL NOT BE USED ON OTHER PROJECTS OR EXTENSIONS TO THIS PROJECT EXCEPT BY AGREEMENT IN WRITING AND WITH APPROPRIATE COMPENSATION TO THE ARCHITECT. CONTRACTOR IS RESPONSIBLE FOR THE CONFIRMING AND CORRELATING DIMENSIONS AT JOB SITE. THE ARCHITECT WILL NOT BE RESPONSIBLE FOR CONSTRUCTION MEANS, METHODS, TECHNIQUES, SEQUENCES OR FOR SAFETY PRECAUTIONS AND PROGRAMS IN CONNECTION WITH THE PROJECT.

PROJECT NO. 20-1605

DATE 10/21/16

Foundation Plan - Field House

SHEET NUMBER

S1.1

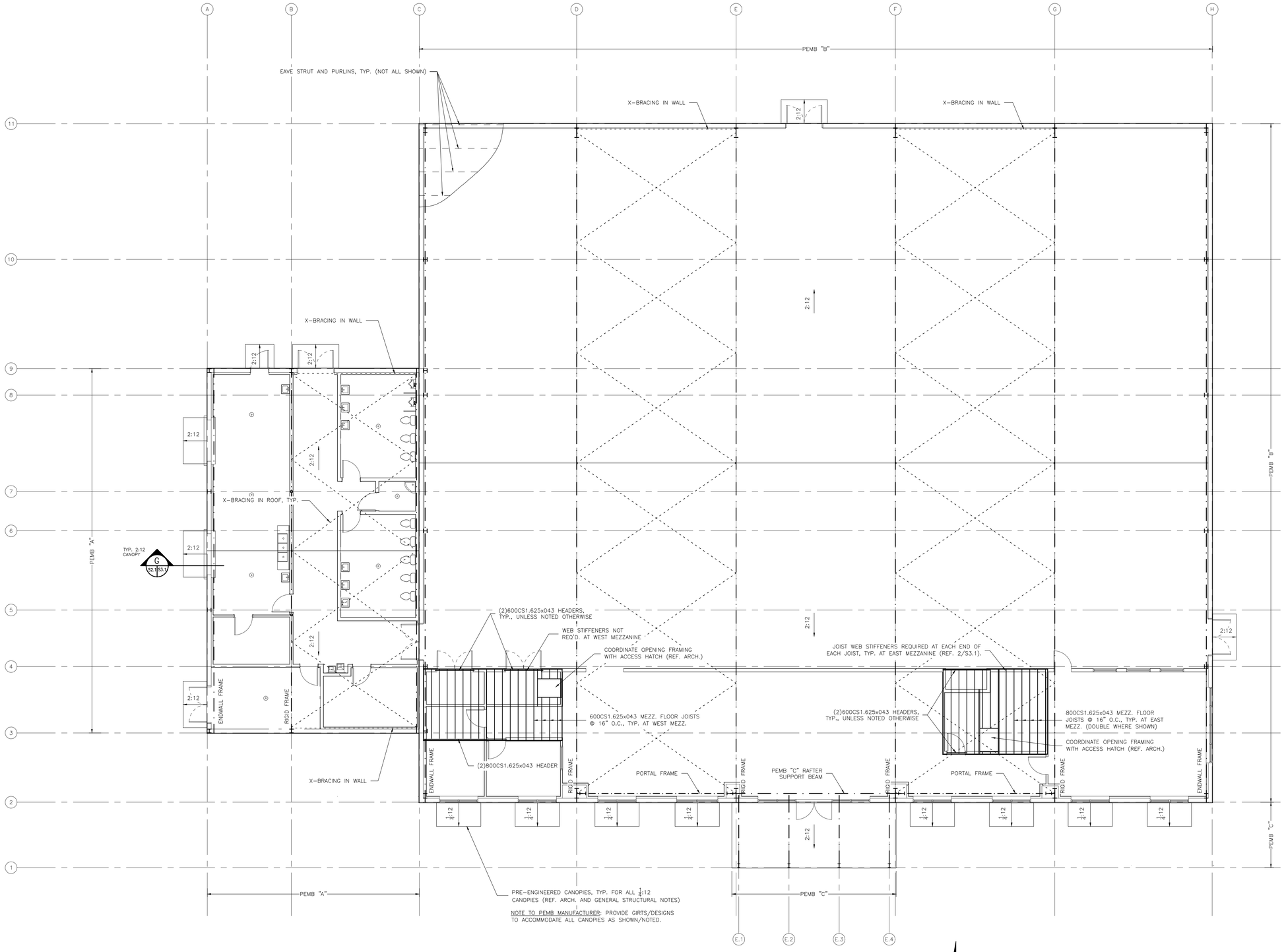

A
S2.1

FRAMING PLAN – FIELD HOUSE

SCALE: 1/8" = 1'-0"

PLAN NORTH

NOTE: REF. B/S3.1 FOR TYPICAL DUGOUT FRAMING PLAN.

REVISIONS

NO.	DESCRIPTION	DATE

PETER LEWIS
ARCHITECT + ASSOCIATES
334 West Water Street Kerrville, TX 78028
(830) 896-4220 Fax (830) 896-4226
www.pwlarchitect.com

MAXWELL ENGINEERING, PLLC
Structural | Geotechnical | Civil | Forensic
Since 1999 • Texas Registered Engineering Firm F-943
911 Panorama Drive • Kerrville, Texas 78028
Office 830.895.0032 • maxengllc.com

JIM MAXWELL
80643
REGISTERED PROFESSIONAL ENGINEER

THE SEAL APPEARING ON THIS DRAWING WAS AUTHORIZED BY JIM MAXWELL, P.E. ON OCTOBER 21, 2016.

CITY OF KERRVILLE 1889 TEXAS

City of Kerrville Athletic Complex Field House

Kerrville, Texas

NOT PUBLISHED. ALL RIGHTS RESERVED BY THE ARCHITECT. DRAWINGS AND SPECIFICATIONS AS INSTRUMENTS OF SERVICE ARE AND SHALL REMAIN THE PROPERTY OF THE ARCHITECT. THEY SHALL NOT BE USED ON OTHER PROJECTS OR EXTENSIONS TO THIS PROJECT EXCEPT BY AGREEMENT IN WRITING AND WITH APPROPRIATE COMPENSATION TO THE ARCHITECT. CONTRACTOR IS RESPONSIBLE FOR THE CONFIRMING AND CORRELATING DIMENSIONS AT JOB SITE. THE ARCHITECT WILL NOT BE RESPONSIBLE FOR CONSTRUCTION MEANS, METHODS, TECHNIQUES, SEQUENCES OR FOR SAFETY PRECAUTIONS AND PROGRAMS IN CONNECTION WITH THE PROJECT.

PROJECT NO. 20-1605

DATE 10/21/16

Framing Plan - Field House

SHEET NUMBER

S2.1

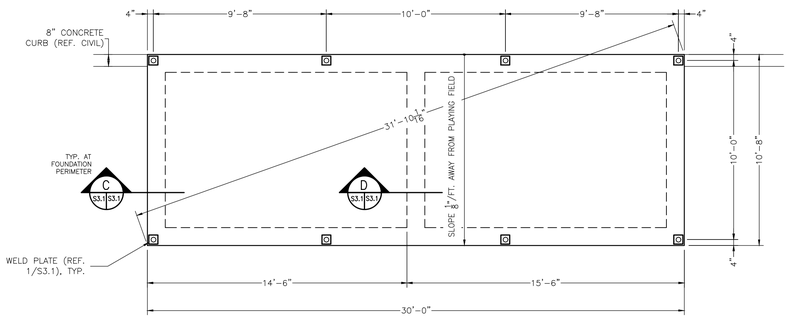

A S1.1 S3.1 FOUNDATION PLAN – TYP. DUGOUT

SCALE: 1/4" = 1'-0"

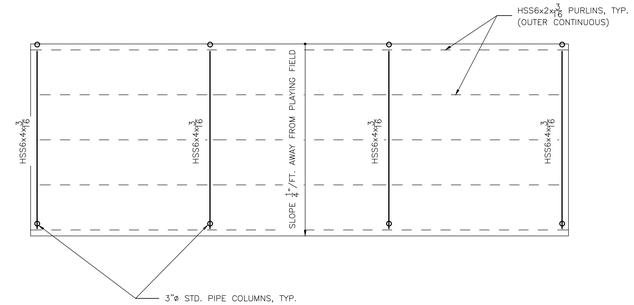

B S2.1 S3.1 FRAMING PLAN – TYP. DUGOUT

SCALE: 1/4" = 1'-0"

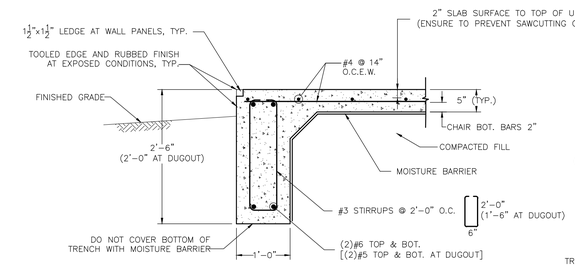

C S1.1 S3.1 SECTION

S3.1

SCALE: 3/4" = 1'-0"

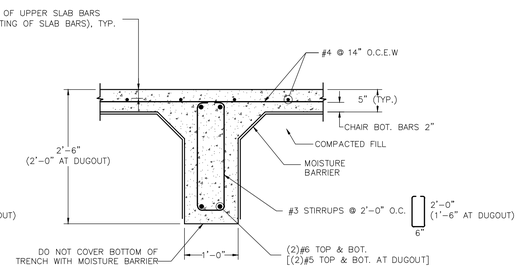

D S1.1 S3.1 SECTION

S3.1

SCALE: 3/4" = 1'-0"

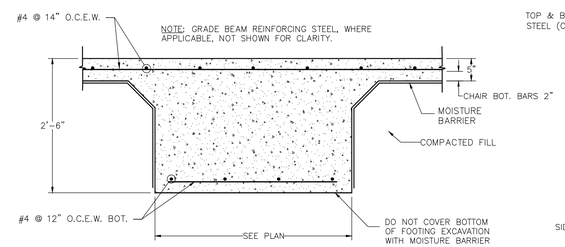

E S1.1 S3.1 SECTION

SCALE: 3/4" = 1'-0"

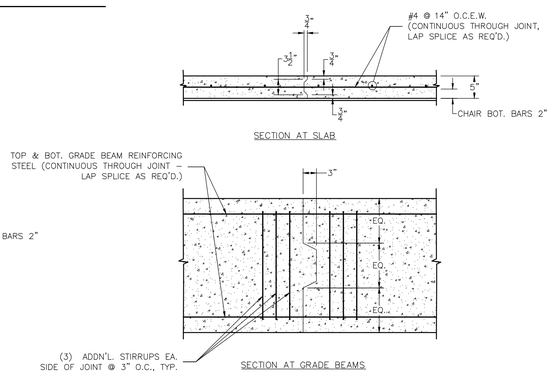

F S1.1 S3.1 SECTION

SCALE: 3/4" = 1'-0"

BOXED SUPPORT STUD FORCES ON WALL GIRTS (LBS.) (POSITIVE INDICATES INWARD FORCE ON GIRT)			
	DEAD	LIVE	WIND
GIRT @ 7'-4" *	−18	−41	−20
GIRT @ 13'-0"	−15	−34	85

* SUM OF FORCES (NET) FROM UPPER AND LOWER BOXED SUPPORT STUD

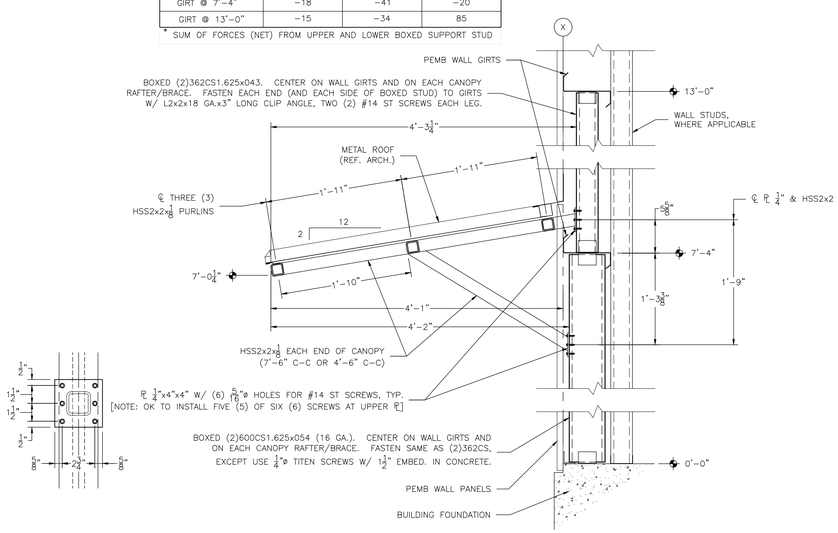

G S1.1 S3.1 SECTION

SCALE: 1" = 1'-0"

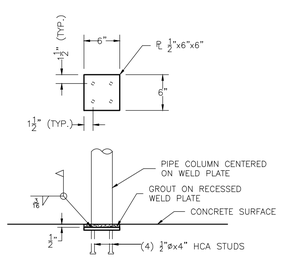

1 S3.1 S3.1 DETAIL

SCALE: 1" = 1'-0"

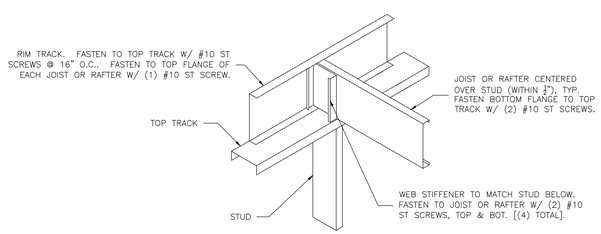

2 S2.1 S3.1 DETAIL

SCALE: N.T.S.

ANCHOR BOLT SCHEDULE (STRAIGHT ALL THREAD)			
DIAMETER	A	B	C
1/2"ø	0'-7 1/2"	0'-1 1/2"	0'-1 1/2" + GROUT THICK.
5/8"ø	1'-1 1/2"	0'-1 1/2"	0'-1 1/2" + GROUT THICK.
3/4"ø	1'-11"	0'-1 1/2"	0'-2 1/2" + GROUT THICK.
7/8"ø	2'-0 1/2"	0'-1 1/2"	0'-2 1/2" + GROUT THICK.
1"ø	2'-2 1/2"	0'-1 1/2"	0'-3" + GROUT THICK.
1 1/8"ø	2'-4 1/2"	0'-1 1/2"	0'-3 1/2" + GROUT THICK.
1 1/4"ø	2'-6 1/4"	0'-1 3/4"	0'-3 1/2" + GROUT THICK.
1 3/8"ø	2'-8 1/4"	0'-1 3/4"	0'-4" + GROUT THICK.
1 1/2"ø	2'-9 3/4"	0'-1 3/4"	0'-4" + GROUT THICK.

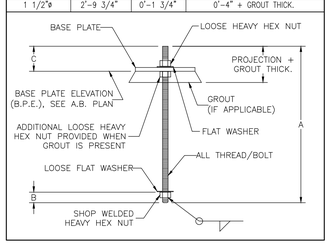

REVISIONS

NO.	DESCRIPTION	DATE

PETER LEWIS ARCHITECT + ASSOCIATES

334 West Water Street Kerrville, TX 78028
(830) 896-4220 Fax (830) 896-4226
www.pwlarchitect.com

MAXWELL ENGINEERING, PLLC
Structural | Geotechnical | Civil | Forensic
Since 1999 • Texas Registered Engineering Firm F-943
911 Panorama Drive • Kerrville, Texas 78028
Office 830.895.0032 • maxengpllc.com

STATE OF TEXAS JIM MAXWELL 80643 REGISTERED PROFESSIONAL ENGINEER

THE SEAL APPEARING ON THIS DRAWING WAS AUTHORIZED BY JIM MAXWELL, P.E. ON OCTOBER 21, 2016.

CITY OF KERRVILLE 1889 TEXAS

City of Kerrville Athletic Complex Field House

Kerrville, Texas

NOT PUBLISHED. ALL RIGHTS RESERVED BY THE ARCHITECT. DRAWINGS AND SPECIFICATIONS AS INSTRUMENTS OF SERVICE ARE AND SHALL REMAIN THE PROPERTY OF THE ARCHITECT WHO PRODUCED THEM. THEY ARE NOT TO BE USED FOR ANY PURPOSES TO THIS PROJECT EXCEPT BY AGREEMENT IN WRITING AND WITH APPROPRIATE COMPENSATION TO THE ARCHITECT. CONTRACTOR IS RESPONSIBLE FOR THE CONFIRMING AND CORRELATING DIMENSIONS AT JOB SITE. THE ARCHITECT WILL NOT BE RESPONSIBLE FOR CONSTRUCTION MEANS, METHODS, TECHNIQUES, SEQUENCES OR FOR SAFETY PRECAUTIONS AND PROGRAMS IN CONNECTION WITH THE PROJECT.

PROJECT NO.	DATE
20-1605	10/21/16

Details

SHEET NUMBER

S3.1

GENERAL STRUCTURAL NOTES

GENERAL

1. THE TERM "CONTRACTOR" SHALL INCLUDE THE GENERAL CONTRACTOR AND ALL SUBCONTRACTORS. THE GENERAL CONTRACTOR SHALL BE RESPONSIBLE FOR OVERALL COORDINATION OF VARIOUS TRADES/SUBCONTRACTORS, AND THE SATISFACTORY PERFORMANCE OF THE WORK.

2. THE CONTRACTOR SHALL VISIT THE PROJECT SITE AND REVIEW THE CONSTRUCTION DOCUMENTS, AND SHALL BE SATISFIED REGARDING ALL EXISTING CONDITIONS, GRADES, DIMENSIONS AND PROPOSED WORK. SHOULD THE CONTRACTOR FIND ANY DISCREPANCY BETWEEN EXISTING CONDITIONS AND THE CONSTRUCTION DOCUMENTS, BE IN DOUBT AS TO ANY PART OF THE WORK, OR WOULD LIKE TO PROPOSE AN ALTERNATE METHOD OF WORK, THE ENGINEER SHALL BE NOTIFIED (AND THE CONTRACTOR SHALL RECEIVE WRITTEN AUTHORIZATION FROM ENGINEER) PRIOR TO CONSTRUCTION OF THAT PART OF THE WORK.

3. AN INDEPENDENT MATERIALS TESTING LABORATORY STAFFED WITH AT LEAST ONE (1) FULL-TIME PROFESSIONAL ENGINEER (GEOTECHNICAL/MATERIALS ENGINEER) AND QUALIFIED TO PERFORM THE QUALITY CONTROL/TESTING OUTLINED BELOW WILL BE RETAINED BY THE OWNER FOR THIS PROJECT. IT SHALL BE THE CONTRACTOR'S RESPONSIBILITY TO COORDINATE ALL TESTING AND CONSTRUCTION OBSERVATION.

4. FRAMING OR OTHER WORK ON FOUNDATION CONCRETE SHALL NOT COMMENCE SOONER THAN 7 DAYS AFTER CONCRETE PLACEMENT OR UNTIL CONCRETE HAS ATTAINED A MINIMUM COMPRESSIVE STRENGTH OF 2,500 PSI.

5. CONTRACTOR SHALL BE RESPONSIBLE FOR LOCATING AND PROTECTING ALL EXISTING UTILITIES AND OTHER IMPROVEMENTS TO REMAIN ON THE SITE. EXISTING UTILITIES OR OTHER IMPROVEMENTS TO REMAIN THAT ARE DAMAGED AS A RESULT OF CONSTRUCTION OF THIS PROJECT SHALL BE REPAIRED OR REPLACED AT CONTRACTOR'S EXPENSE.

6. THE CONTRACTOR SHALL BE RESPONSIBLE FOR OBTAINING ALL NECESSARY PERMITS.

7. THE STRUCTURES SHOWN ON THESE DRAWINGS ARE DESIGNED TO PERFORM AS COMPLETED STRUCTURES AND MAY BE UNSTABLE PRIOR TO COMPLETION OF THE WORK. TEMPORARY SHORING, BRACING AND FORMWORK SHALL BE USED TO PROVIDE FOR THE PROPER AND SAFE EXECUTION OF THE WORK. THE REQUIREMENTS, DESIGN, AND USE OF TEMPORARY SHORING, BRACING AND FORMWORK ARE THE RESPONSIBILITIES OF THE CONTRACTOR.

8. AT A MINIMUM, FOLLOW ALL OSHA SAFETY REGULATIONS (SEE www.osha.gov).

9. FOUNDATION DESIGNS ARE BASED ON THE GEOTECHNICAL ENGINEERING STUDY DATED MAY 18, 2016 BY ROCK ENGINEERING & TESTING LABORATORY, INC. (RETL PROJECT NO. G216136), AVAILABLE FROM ENGINEER.

10. CONTRACTOR SHALL PROVIDE ENGINEER WITH FINAL PRE-ENGINEERED METAL BUILDING ANCHOR BOLT/WELD PLATE PLAN WITH COLUMN BASE REACTIONS FOR FOUNDATION DESIGN VERIFICATION (AND POSSIBLE REVISIONS) PRIOR TO INSTALLATION OF FOUNDATION CONCRETE REINFORCING STEEL.

11. ENGINEER SHALL BE ALLOWED TO OBSERVE CONSTRUCTION FOLLOWING PLACEMENT OF ALL REINFORCING STEEL AND PRIOR TO CONCRETE PLACEMENT. PLEASE PROVIDE A MINIMUM OF 3 BUSINESS DAYS NOTICE.

12. BUILDING DESIGN LOADS ARE AS FOLLOWS:

12.1. FLOOR LIVE LOADS	
12.1.1. GROUND FLOOR SLAB	100 PSF
12.1.2. STORAGE	125 PSF
12.1.3. MECHANICAL MEZZANINE	40 PSF
12.2. ROOF LIVE LOADS	20 PSF ON HORIZONTAL PROJECTED SURFACE (REDUCIBLE PER INTERNATIONAL BUILDING CODE)
12.3. ROOF COLLATERAL LOAD	6 PSF
12.4. SNOW LOADS	
12.4.1. SNOW IMPORTANCE FACTOR	1.0 (CATEGORY II BUILDING)
12.4.2. GROUND SNOW LOAD	5 PSF
12.5. WIND LOADS	
12.5.1. BASIC WIND SPEED	90 MPH (3 SECOND GUST)
12.5.2. WIND IMPORTANCE FACTOR	1.0 (CATEGORY II BUILDING)
12.5.3. WIND EXPOSURE	C
12.5.4. INTERNAL PRESSURE COEFF.	±0.18
12.6. SEISMIC LOADS	
12.6.1. SEISMIC IMPORTANCE FACTOR	1.0 (CATEGORY II BUILDING)
12.6.2. SPECTRAL RESPONSE ACCEL.	$S_s = 0.071g$, $S_1 = 0.024g$
12.6.3. SITE CLASS	D
12.6.4. SPECTRAL RESPONSE COEFF.	$S_{DS} = 0.076g$, $S_{D1} = 0.038g$
12.6.5. SEISMIC DESIGN CATEGORY	A
12.7. FLOOD LOADS	NOT IN A FLOOD HAZARD ZONE
12.8. SPECIAL LOADS	SEE DRAWINGS FOR SPECIAL LOADS ON PEMB

FOUNDATION SITE WORK

1. THE AREA BENEATH THE BUILDING FOUNDATION AND PORCHES AND FIVE FEET (5'-0") BEYOND SHALL BE CLEARED AND STRIPPED OF ALL EXISTING TOPSOIL, GRASS, ORGANICS, LOOSE DEBRIS, PAVEMENT AND OTHER OBJECTIONABLE MATERIAL. EXCAVATION WITHIN THIS AREA SHALL CONTINUE TO A DEPTH OF TWO FEET (2'-0") BENEATH EXISTING GRADES.

2. EXCAVATED MATERIAL SHALL BE PROPERLY DISPOSED OF BY CONTRACTOR.

3. CONTRACTOR SHALL NOTIFY ENGINEER IMMEDIATELY UPON DISCOVERY OF CONDITIONS OTHER THAN DOCUMENTED IN THE ABOVE-MENTIONED GEOTECHNICAL ENGINEERING STUDY. DISCOVERY OF CONDITIONS OTHER THAN DOCUMENTED MAY REQUIRE DESIGN MODIFICATIONS.

4. FOLLOWING CLEARING, STRIPPING AND EXCAVATION, THE EXPOSED SUBGRADE SHALL BE PROOF-ROLLED UNDER THE SUPERVISION OF THE GEOTECHNICAL ENGINEER OR HIS REPRESENTATIVE WITH A MINIMUM 20-TON FULLY-LOADED SINGLE REAR AXLE DUMP TRUCK (OR OTHER HEAVY RUBBER-TIRED VEHICLE ACCEPTABLE TO THE GEOTECHNICAL ENGINEER). ANY SOFT OR LOOSE AREAS THAT ARE IDENTIFIED SHALL BE EXCAVATED TO EXPOSE STIFF SUBGRADE SOILS, AND THE EXCAVATION REPLACED WITH PROPERLY COMPACTED SELECT FILL AS SPECIFIED BELOW.

5. FOLLOWING PROOF-ROLLING, THE EXPOSED SUBGRADE SHALL BE SCARIFIED TO A MINIMUM DEPTH OF SIX INCHES (6"), MOISTURE CONDITIONED IF NECESSARY, AND COMPACTED TO A MINIMUM OF NINETY-FIVE PERCENT (95%) OF THE MAXIMUM DRY DENSITY WITHIN ONE PERCENT BELOW TO THREE PERCENT ABOVE (-1% TO +3%) THE OPTIMUM MOISTURE CONTENT AS DETERMINED BY ASTM D698 (STANDARD PROCTOR). SEE BELOW FOR TESTING REQUIREMENTS.

6. AFTER SUBGRADE PREPARATION, SELECT FILL MATERIAL SHALL BE INSTALLED ON TOP OF THE PREPARED SUBGRADE UP TO FIVE INCHES (5") BENEATH FINISHED FLOOR ELEVATIONS (COORDINATE WITH SLAB DROPS AND SLOPES). ALL SELECT FILL MATERIAL SHALL BE PLACED IN EIGHT (8) INCH (MAX.) LOOSE LIFTS, WATERED AS NEEDED AND COMPACTED BY VIBRATORY COMPACTION EQUIPMENT. SELECT FILL MATERIAL SHALL BE COMPACTED TO A MINIMUM OF NINETY-FIVE PERCENT (95%) OF THE MAXIMUM DRY DENSITY WITHIN ONE PERCENT BELOW TO THREE PERCENT ABOVE (-1% TO +3%) THE OPTIMUM MOISTURE CONTENT AS DETERMINED BY ASTM D698 (STANDARD PROCTOR). SEE BELOW FOR TESTING REQUIREMENTS.

7. SELECT FILL MATERIAL SHALL BE NON-EXPANSIVE HAVING A PLASTICITY INDEX (PI) BETWEEN FIVE PERCENT (5%) AND EIGHTEEN PERCENT (18%), AND A LIQUID LIMIT NOT EXCEEDING FORTY PERCENT (40%). FILL SHALL BE FREE OF ORGANICS, TRASH, RUBBLE OR OTHER OBJECTIONABLE MATERIAL, AND SHALL HAVE NO PARTICLE SIZE GREATER THAN THREE (3) INCHES IN DIAMETER. CRUSHED LIMESTONE, IF USED, SHALL MEET THE PLASTICITY AND GRADATION REQUIREMENTS SET FORTH IN THE TEXAS DEPARTMENT OF TRANSPORTATION (TxDOT) STANDARD SPECIFICATIONS 2004; ITEM 247, TYPE A, GRADE 2 OR BETTER.

8. EARTHWORK SEQUENCING AND TESTING REQUIREMENTS:
   8.1. ALL EARTHWORK SHALL BE PERFORMED IN ONE (1) CONTINUOUS OPERATION, WITH ANY DELAYS LASTING NO LONGER THAN FOURTY-EIGHT (48) HOURS. THE GEOTECHNICAL ENGINEER SHALL APPROVE THE WORK AND ANY ADDITIONAL TESTING THAT MAY BE REQUIRED FOLLOWING DELAYS IN EARTHWORK LASTING LONGER THAN FOURTY-EIGHT (48) HOURS OR FOLLOWING SIGNIFICANT RAIN EVENTS.
   8.2. SUBGRADE TESTING: PROOF-ROLLING AS DESCRIBED ABOVE, THEN SAMPLE AND TEST IN ACCORDANCE WITH ASTM D698 (STANDARD PROCTOR). AT LEAST ONE (1) IN-PLACE DENSITY TEST (ASTM D6938) SHALL BE PERFORMED PER EVERY THREE THOUSAND (3,000) SQUARE FEET OF PREPARED SUBGRADE, OR A MINIMUM OF THREE (3) TESTS, WHICHEVER RESULTS IN THE GREATER NUMBER OF TESTS. AREAS NOT MEETING THE REQUIRED COMPACTION OR MOISTURE SHALL BE REWORKED AND TESTED UNTIL COMPLIANCE IS MET.
   8.3. SELECT FILL TESTING: SELECT FILL MATERIAL SHALL BE SAMPLED AND TESTED IN ACCORDANCE WITH ASTM D4318 (ATTERBERG LIMITS) AND ASTM D698 (MODIFIED PROCTOR) IN ADVANCE OF INSTALLATION SO THAT CONSTRUCTION SEQUENCING, AS NOTED ABOVE, CAN BE ACHIEVED. PIT RUN BORROW FILLS SHALL BE TESTED TO CONFIRM COMPLIANCE WITH THE ABOVE-MENTIONED SPECIFICATION REQUIREMENTS ONCE PER EACH TYPE OF PROPOSED FILL MATERIAL, AS DETERMINED BY THE GEOTECHNICAL ENGINEER. TESTING TO VERIFY COMPACTION AND MOISTURE IS ALSO REQUIRED. AT LEAST ONE (1) IN-PLACE DENSITY TEST (ASTM D6938) SHALL BE PERFORMED PER EVERY THREE THOUSAND (3,000) SQUARE FEET OF BUILDING PAD AREA PER LIFT, OR A MINIMUM OF THREE (3) TESTS PER LIFT, WHICHEVER RESULTS IN THE GREATER NUMBER OF TESTS. AREAS NOT MEETING THE REQUIRED COMPACTION OR MOISTURE SHALL BE REWORKED AND TESTED UNTIL COMPLIANCE IS MET.

9. THE SURFACE OF FILL MATERIAL SHALL BE FINISHED TO YIELD A SLAB THICKNESS OF 5" (±½" TOLERANCE). COORDINATE FINAL GRADING WORK CLOSELY WITH SLAB DROPS AND SLOPES.

10. SPOILS FROM UTILITY AND GRADE BEAM TRENCH AND FOOTING EXCAVATIONS SHALL NOT BE USED AS FILL BENEATH SLAB.

11. MOISTURE BARRIERS SHALL BE 10-MIL POLYETHYLENE AND SHALL BE INSTALLED WITH MINIMUM LAPS OF 18". REPAIR TEARS OR HOLES PRIOR TO CONCRETE PLACEMENT WITH POLYETHYLENE PATCHES AND DUCT TAPE.

12. TRENCHES FOR GRADE BEAMS AND FOOTINGS SHALL BE EXCAVATED AND SUBSEQUENT WORK PERFORMED IN SUCH A MANNER AS TO KEEP SURFACES TO RECEIVE CONCRETE, INCLUDING BOTTOMS OF GRADE BEAMS AND FOOTINGS, FREE OF LOOSE ROCK/SOIL/DEBRIS. MOISTURE BARRIERS SHALL NOT BE INSTALLED ON BOTTOMS OF GRADE BEAMS OR FOOTINGS.

13. UTILITY CONDUIT GREATER THAN 2" IN DIAMETER SHALL NOT BE PLACED IN BEAM OR FOOTING TRENCHES, EXCEPT THAT CONDUIT MAY CROSS TRENCHES AT NO LESS THAN 60-DEGREE ANGLES AND THROUGH THE MIDDLE THIRD OF THE HEIGHT OF THE BEAM OR FOOTING. DO NOT CUT REINFORCING STEEL OR ALLOW REINFORCING STEEL TO BE DISCONTINUOUS FOR PASSAGE OF UTILITY CONDUIT. CONDUIT IN SLAB SHALL BE 1" DIAMETER OR LESS, SPACED 2" CLEAR (MIN.) AND SHALL BE INSTALLED BENEATH SLAB REINFORCING STEEL.

14. CONCRETE COVER FOR UTILITY CONDUIT SHALL NOT BE LESS THAN 1½" FOR CONCRETE EXPOSED TO EARTH OR WEATHER, OR NOT LESS THAN ¾" FOR CONCRETE NOT EXPOSED WEATHER OR IN CONTACT WITH THE GROUND.

15. DURING CONSTRUCTION,
   15.1. POSITIVE DRAINAGE SHALL BE MAINTAINED TO PREVENT PONDING OF WATER IN GRADE BEAM TRENCHES, FOOTING EXCAVATIONS, OR ON SUBGRADE OR SELECT FILL WITHIN THE FOUNDATION AREAS.
   15.2. UTILITY TRENCHES OUTSIDE OF THE FOUNDATION PERIMETER SHALL NOT BE BACKFILLED WITH SAND, GRAVEL OR OTHER PERMEABLE MATERIAL TO PREVENT THE TRENCHES FROM SERVING AS AQUEDUCTS THAT COULD TRANSPORT WATER BENEATH THE FOUNDATION.

16. FOLLOWING CONSTRUCTION,
   16.1. POSITIVE DRAINAGE SHALL BE MAINTAINED AROUND THE STRUCTURE THROUGH A ROOF/GUTTER SYSTEM CONNECTED TO PIPING OR DIRECTED AWAY FROM THE FOUNDATION PERIMETER. IN ADDITION, POSITIVE GRADES SLOPING AWAY FROM THE FOUNDATION SHALL BE DESIGNED AND IMPLEMENTED FOR THE AREA EXTENDING AT LEAST TEN (10) FEET AWAY FROM THE FOUNDATION PERIMETER.
   16.2. VEGETATION PLACED IN LANDSCAPE BEDS THAT ARE ADJACENT TO THE FOUNDATION SHALL BE LIMITED TO PLANTS AND SHRUBS THAT WILL NOT EXCEED A MATURE HEIGHT OF THREE (3) FEET. LARGE BUSHES AND TREES SHALL BE PLANTED AWAY FROM THE FOUNDATION AT A DISTANCE THAT WILL EXCEED THEIR FULL MATURE HEIGHT OR CANOPY WIDTH, WHICHEVER IS GREATER.
   16.3. ALL PROJECT FEATURES BEYOND THE SCOPE OF THOSE DISCUSSED ABOVE SHALL BE PLANNED AND DESIGNED SIMILARLY TO PREVENT PONDING OF WATER WITHIN TEN (10) FEET OF THE FOUNDATION.

CONCRETE REINFORCING STEEL AND EMBEDDED ITEMS

1. ALL REINFORCING STEEL BARS (REBAR) SHALL CONFORM TO ASTM A615, GRADE 60.

2. REINFORCING STEEL SHALL NOT BE BENT USING HEAT.

3. STIRRUPS SHALL NOT BE CUT TO ACCOMMODATE CONCRETE DIMENSIONS LESS THAN SHOWN ON THE DRAWINGS.

4. REINFORCING STEEL SHALL BE FREE OF EXCESSIVE RUST, MILL SCALE, OIL, PAINT OR OTHER DELETERIOUS MATERIALS.

5. MINIMUM REBAR LAP SPLICE LENGTHS SHALL BE AS FOLLOWS:

BAR SIZE	TOP BAR LAP LENGTH*	OTHER BAR LAP LENGTH
#3	2'-4"	1'-10"
#4	3'-1"	2'-5"
#5	3'-11"	3'-0"
#6	4'-8"	3'-7"

* A TOP BAR IS A HORIZONTAL BAR WITH MORE THAN 12" OF CONCRETE CAST BELOW THE BAR.

6. PROVIDE STEEL CHAIRS OR BOLSTER SUPPORTS AS NEEDED TO HOLD REINFORCING STEEL AT DESIGN LOCATIONS WITHOUT SAG OR DISPLACEMENT DURING PLACEMENT OF CONCRETE. UNLESS OTHERWISE SHOWN ON THE DRAWINGS, MAINTAIN THE FOLLOWING CLEAR COVER FROM FACE OF CONCRETE TO CLOSEST EDGE OF REINFORCING STEEL:
   6.3. CONCRETE CAST AGAINST AND PERMANENTLY EXPOSED TO EARTH, 3"
   (EXCEPT SINGLE MATS OF STEEL IN SLABS-ON-GRADE SHALL BE CENTERED WITHIN THE THICKNESS OF THE SLAB.)
   6.4. CONCRETE EXPOSED TO EARTH OR WEATHER, #5 BAR AND SMALLER, 1-1/2"
   6.5. CONCRETE EXPOSED TO EARTH OR WEATHER, #6 BAR AND LARGER, 2"
   6.6. CONCRETE NOT EXPOSED TO WEATHER OR IN CONTACT WITH THE GROUND,
      6.6.1. SLABS, WALLS AND JOISTS, 3/4"
      6.6.2. BEAMS AND COLUMNS, 1-1/2"

7. NINETY-DEGREE CORNER BARS SHALL BE PROVIDED AT THE INTERSECTING ENDS OF ALL INTERIOR AND EXTERIOR BEAMS AND WALLS, AND SHALL BE OF THE SAME SIZE, NUMBER AND LOCATION AS THE TOP AND BOTTOM BEAM PRIMARY REINFORCING STEEL AND ALL HORIZONTAL WALL REINFORCING BARS. CORNER BARS SHALL BE LAPPED WITH BEAM AND WALL REINFORCING 2'-0" MIN.

8. SHOP DRAWINGS SHALL BE SUBMITTED TO A/E FOR REVIEW PRIOR TO ORDERING REINFORCING STEEL. SHOP DRAWINGS SHALL INCLUDE BAR SIZES, GRADES, SPACING, PLACEMENT, SPLICE LOCATIONS, BENDS, AND PROPOSED CHAIRING METHODS.

9. HEADED CONCRETE ANCHOR (HCA) STUDS SHALL CONFORM TO ASTM A108 GR. 1010, 1015, 1017 OR 1020, HAVE A MINIMUM YIELD STRENGTH OF 50,000 PSI AND SHALL BE WELDED ACCORDING TO MANUFACTURER'S RECOMMENDATIONS.

10. EMBEDDED STEEL ANGLES AND PLATES (FOR HCA STUDS) SHALL CONFORM TO ASTM A36 OR ASTM A572 GR. 36/50.

11. ADHESIVE ANCHORAGE OF EMBEDDED ITEMS IN CONCRETE SHALL BE WITH SIMPSON SET ADHESIVE ANCHORAGE SYSTEM, OR ENGINEER-APPROVED EQUAL. INSTALL ACCORDING TO MANUFACTURER'S RECOMMENDATIONS.

12. WEDGE ANCHORS SHALL BE SIMPSON WEDGE-ALL, OR ENGINEER-APPROVED EQUAL. INSTALL ACCORDING TO MANUFACTURER'S RECOMMENDATIONS.

CONCRETE FORMWORK

1. FORMWORK SHALL YIELD A FINAL STRUCTURE CONFORMING TO THE SHAPES, LINES AND DIMENSIONS SHOWN ON THE DRAWINGS.

2. FORMWORK FOR PERIMETER GRADE BEAMS AND WALLS SHALL EXTEND AT LEAST SIX INCHES (6") BELOW FINISHED GRADE ELEVATIONS.

3. DO NOT REMOVE FORMS OR BRACING UNTIL CONCRETE HAS CURED FOR A MINIMUM OF 7 DAYS AND GAINED SUFFICIENT STRENGTH TO CARRY ITS OWN WEIGHT AND ANY SUPERIMPOSED LOADS.

CONCRETE

1. CONCRETE SHALL BE NORMAL WEIGHT, HAVE A MINIMUM 28-DAY COMPRESSIVE STRENGTH OF 3,000 PSI, SHALL HAVE A SLUMP BETWEEN 3" AND 5", SHALL HAVE A MAXIMUM COARSE AGGREGATE SIZE OF 1-1/4", SHALL HAVE A MAXIMUM PERMISSIBLE WATER-CEMENT RATIO OF 0.58 FOR NON-AIR-ENTRAINED CONCRETE AND 0.46 FOR AIR-ENTRAINED CONCRETE, AND SHALL CONFORM TO ASTM C94, "STANDARD SPECIFICATION FOR READY-MIXED CONCRETE".

2. CONCRETE SHALL BE BATCHED AND PLACED, AS APPLICABLE, ACCORDING TO ACI 306R, "COLD WEATHER CONCRETING", AND ACI 305R, "HOT WEATHER CONCRETING".

3. PORTLAND CEMENT USED TO MAKE CONCRETE SHALL BE EITHER TYPE I, TYPE IA AIR ENTRAINING, TYPE I-II OR TYPE II CEMENT CONFORMING TO ASTM C150, "SPECIFICATION FOR PORTLAND CEMENT". FLY ASH MAY BE USED WHERE CONCRETE WILL NOT BE STAINED, PROVIDED THE FLY ASH CONSTITUTES NO MORE THAN 20% OF THE TOTAL WEIGHT OF THE CEMENTITIOUS MATERIALS. AGGREGATE SHALL CONFORM TO ASTM C33, "CONCRETE AGGREGATES".

4. CONCRETE OR CONCRETE ADMIXTURES CONTAINING CALCIUM CHLORIDE IS PROHIBITED.

5. THE ADDITION OF WATER TO THE CONCRETE AT THE JOB SITE IS ALLOWED PROVIDED:
   5.1. THE CALCULATED MAXIMUM AMOUNT OF WATER TO BE ADDED IS PRE-DETERMINED BY THE BATCH PLANT OPERATOR AND THE CONCRETE TRUCK DRIVER AND CONCRETE CONTRACTOR IS MADE AWARE OF THIS MAXIMUM AMOUNT OF WATER PRIOR TO DISCHARGE,
   5.2. CONCRETE IS MIXED FOLLOWING THE ADDITION OF WATER WITH AT LEAST AN ADDITIONAL THIRTY (30) REVOLUTIONS OF THE TRUCK MIXING DRUM AT MIXING SPEED,
   5.3. CONCRETE IS SAMPLED AND TESTED, AS DESCRIBED BELOW, FOLLOWING THE ADDITION OF WATER,
   5.4. THE MAXIMUM ALLOWABLE SLUMP OR WATER-CEMENT RATIO, AS SPECIFIED ABOVE, IS NOT EXCEEDED,
   5.5. THE AMOUNT OF WATER ADDED IS RECORDED AND REPORTED BY THE TESTING LABORATORY, AND
   5.6. NO WATER IS ADDED AFTER DISCHARGE OF THE FIRST 1/4 CUBIC YARD OF CONCRETE.

   ALTERNATIVELY, A WATER REDUCING AGENT CONFORMING TO ASTM C494, "SPECIFICATIONS FOR CHEMICAL ADMIXTURES FOR CONCRETE", MAY BE USED.

6. CONTRACTOR SHALL NOT PLACE CONCRETE WHEN IMPENDING WEATHER MAY RESULT IN RAINFALL OR LOW TEMPERATURES WHICH MIGHT IMPAIR THE QUALITY OF THE FINISHED WORK. IN NO CASE SHALL CONCRETE BE PLACED WHEN THE SURROUNDING AIR TEMPERATURE IS LESS THAN 40°F. PROTECTION AND/OR HEAT MUST BE PROVIDED WHERE NECESSARY TO INSURE CONCRETE TEMPERATURES REMAIN ABOVE 50°F FOR 72 HOURS AFTER PLACEMENT AND ABOVE 40°F FOR AN ADDITIONAL 72 HOURS. THE CONTRACTOR SHALL HAVE ON SITE AND PROVIDE AMPLE COVERING TO PROTECT THE WORK IN CASE RAINFALL SHOULD OCCUR AFTER PLACING OPERATIONS HAVE BEGUN.

7. PLACING CONCRETE DURING EXTREME HOT WEATHER SHALL BE AVOIDED. WHERE NECESSARY TO PREVENT EXCESSIVE CONCRETE TEMPERATURE OR EVAPORATION OF WATER FROM CONCRETE DURING HOT WEATHER PLACEMENT, THE OPERATION SHALL BE SHIELDED FROM SUN IF POSSIBLE. COOLING OF MIX INGREDIENTS AND AN APPROVED RETARDING AGENT SHALL BE USED IN THE CONCRETE. THE MAXIMUM TEMPERATURE OF CONCRETE AT TRUCK DISCHARGE SHALL BE 95°F.

8. FROM THE TIME WATER IS ADDED INTO THE MIX AT THE PLANT, THE TRUCK DISCHARGE TIME SHALL NOT EXCEED THE FOLLOWING:

AIR TEMPERATURE	MAXIMUM DISCHARGE TIME
IN EXCESS OF 90°	60 MINUTES
70° TO 90°	90 MINUTES
LOWER THAN 70°	120 MINUTES

10. CONCRETE SHALL BE SAMPLED AND TESTED ACCORDING TO THE FOLLOWING:
   CYLINDERS (5 PER TEST, LABORATORY-CURED) – ASTM C31, C39 AND C192.
   SLUMP – ASTM C143.
   TEMPERATURE – ASTM C1064.

   TESTING SHALL BE PERFORMED AT A FREQUENCY OF ONCE EACH DAY BUT NOT LESS THAN ONCE PER EVERY 100 CUBIC YARDS PLACED OR EVERY 3,500 SQUARE FEET OF CONCRETE SURFACE, WHICHEVER YIELDS THE MOST TESTS. SAMPLES SHALL BE OBTAINED AND HANDLED IN ACCORDANCE WITH ASTM C172, "PRACTICE FOR SAMPLING FRESHLY MIXED CONCRETE".

11. CONTRACTOR SHALL MAINTAIN RECORDS OF CONCRETE PLACEMENT DATE, LOCATION, QUANTITY, TESTING AND BATCH TICKETS. BATCH TICKETS SHALL INCLUDE DATE, TRUCK NUMBER, CONTRACTOR'S NAME, PROJECT NAME, MIX DESIGN NUMBER, STRENGTH OF CONCRETE, QUANTITY, TIME WHEN BATCHED, TIME OF COMPLETION OF PLACEMENT AND THE SIGNATURE OF THE RECEIVER OF THE CONCRETE.

12. THE CONTRACTOR IS RESPONSIBLE FOR PLACING CONCRETE DURING ACCEPTABLE WEATHER CONDITIONS, AS DESCRIBED ABOVE. THE CONTRACTOR IS ALSO RESPONSIBLE FOR PROVIDING A MIX DESIGN AND CONCRETE THAT MEET THE REQUIREMENTS OF THESE DRAWINGS AND SPECIFICATIONS, AS WELL AS FOR REJECTING CONCRETE THAT DOES NOT.

13. CONCRETE SHALL BE PLACED MONOLITHICALLY AND SHALL BE PROPERLY VIBRATED TO ELIMINATE "HONEY COMBING". UNLESS OTHERWISE SHOWN ON THE DRAWINGS, DO NOT ALLOW FORMATION OF COLD JOINTS.

14. UNLESS OTHERWISE NOTED ON THE DRAWINGS, HORIZONTAL INTERIOR CONCRETE SURFACES SHALL RECEIVE A SMOOTH TROWEL FINISH. EXTERIOR SURFACES SHALL RECEIVE A LIGHT BROOM FINISH. CONTRACTOR SHALL VERIFY AND COORDINATE ANY REQUIRED CONCRETE FINISHES WITH FLOOR COVERINGS/FINISHES, ARCHITECT AND OWNER.

15. UNLESS OTHERWISE NOTED ON THE DRAWINGS, VERTICAL CONCRETE SURFACES SHALL RECEIVE A RUBBED FINISH. VERIFY WITH ARCHITECT.

16. UNLESS OTHERWISE NOTED ON THE DRAWINGS, CONCRETE SHALL BE FINISHED TO PROVIDE A FLATNESS OF 1/8" (MAX.) IN 10 FEET.

17. CONCRETE SHALL BE COMPLETELY COVERED AND CURED USING A CURING COMPOUND MEETING THE REQUIREMENTS OF ASTM C309, "LIQUID MEMBRANE-FORMING COMPOUNDS FOR CURING CONCRETE", COTTON OR BURLAP BLANKETS, OR CLEAR POLYETHYLENE SHEETING, AND KEPT CONTINUOUSLY MOIST FOR AT LEAST 3 DAYS. CURING COMPOUNDS SHALL BE APPLIED ACCORDING TO MANUFACTURER'S RECOMMENDATIONS. IF USED, ENSURE COMPATIBLE CURING COMPOUND ON FLOOR AREAS TO BE STAINED.

18. PROVIDE A TOOLED EDGE AT ALL EDGES OF EXPOSED FLAT CONCRETE, UNLESS NOTED OTHERWISE.

CONTROL JOINTS

1. CONTROL JOINTS SHALL BE SAWCUT ¼" WIDE x 1¼" DEEP NO LESS THAN FOUR (4) HOURS IN WARM WEATHER, OR NO LESS THAN TWELVE (12) HOURS IN COLD WEATHER. IT IS THE CONTRACTOR'S RESPONSIBILITY TO TIME SAWCUTTING OF CONTROL JOINTS TO PREVENT DAMAGE TO THE ADJACENT CONCRETE. ALL SAWCUTTING SHALL BE COMPLETED WITHIN TWENTY-FOUR (24) HOURS OF CONCRETE PLACEMENT.

2. CONTROL JOINTS SHALL BE FILLED WITH EUCOLASTIC II (POURABLE GRADE) JOINT SEALANT, OR ENGINEER-APPROVED EQUAL. INSTALL IN ACCORDANCE WITH MANUFACTURER'S RECOMMENDATIONS.

PRE-ENGINEERED METAL BUILDING (PEMB)

1. PEMB SHALL BE DESIGNED AND FABRICATED BY A COMPANY SPECIALIZING IN THIS WORK WITH A MINIMUM OF FIVE (5) YEARS DOCUMENTED EXPERIENCE.

2. PEMB SHALL BE DESIGNED TO RESIST THE DESIGN LOADS LISTED ABOVE AND IN ACCORDANCE WITH THE FOLLOWING CODES AND STANDARDS:
   2.1. AMERICAN INSTITUTE OF STEEL CONSTRUCTION (AISC), MANUAL OF STEEL CONSTRUCTION, ALLOWABLE STRESS DESIGN.
   2.2. AISC, SPECIFICATION FOR THE DESIGN, FABRICATION AND ERECTION OF STRUCTURAL STEEL FOR BUILDINGS.
   2.3. AMERICAN WELDING SOCIETY (AWS), D1.1, D1.3 AND D1.4 STRUCTURAL WELDING CODES.
   2.4. AISC CODE OF STANDARD PRACTICE FOR STEEL BUILDINGS AND BRIDGES.
   2.5. AMERICAN IRON AND STEEL INSTITUTE (AISI), COLD-FORMED STEEL DESIGN MANUAL.

3. ALL STEEL SHALL BE CLEANED OF ALL FOREIGN MATTER AND LOOSE SCALE IN ACCORDANCE WITH SSPC-2 AND GIVEN A 2.4 MIL WET COAT (1.2 MIL DRY) OF POLYURETHANE GRAY OXIDE PRIMER (LANCO MM-225, OR ARCHITECT-APPROVED EQUAL). PRIMER SHALL BE APPLIED BY THE USE OF AIRLESS SPRAY GUN.

4. ANCHOR BOLT GRADES AND DIAMETERS SHALL BE BY PEMB MANUFACTURER. CONCRETE EMBEDMENTS AND PROJECTIONS SHALL BE AS SHOWN IN THE TABLE ON SHEET S3.1.

5. COLUMN BASE/SUPPORT CONNECTIONS SHALL BE DESIGNED AS PINNED.

6. PEMB SHALL BE DESIGNED TO ACCOMMODATE CANOPIES, AS NOTED/SHOWN.

7. DEFLECTIONS SHALL BE LIMITED UNDER THE DESIGN LOADS LISTED ABOVE, AS WELL AS SPECIAL LOADS SHOWN ON THE DRAWINGS, AS FOLLOWS:
   7.1. HORIZONTAL FRAME DEFLECTION (DRIFT) — H/90
   7.2. VERTICAL PURLIN AND RAFTER DEFLECTION — L/180 LIVE, L/120 TOTAL
   7.3. HORIZONTAL GIRT DEFLECTION — L/180

8. REFERENCE ARCHITECTURAL DRAWINGS AND SPECIFICATIONS FOR NON-STRUCTURAL METAL BUILDING COMPONENTS (E.G., ROOF AND WALL PANELS, INSULATION, SEALANTS AND CLOSURES), AS WELL AS FOR ITEMS TO BE SUSPENDED FROM BUILDING.

9. CONSTRUCTION/ERECTION DRAWINGS, ANCHOR BOLT PLANS AND COLUMN BASE REACTIONS FOR THE PEMB, WHICH ARE SIGNED AND SEALED BY A PROFESSIONAL ENGINEER LICENSED IN THE STATE OF TEXAS AND EMPLOYED FULL-TIME BY THE COMPANY PROVIDING THE BUILDING, SHALL BE SUBMITTED TO THE ARCHITECT/ENGINEER (A/E) FOR REVIEW AND VERIFICATION (AND POSSIBLE MODIFICATION) OF FOUNDATION DESIGNS PRIOR TO COMMENCEMENT OF CONCRETE WORK OR ORDERING OF FOUNDATION MATERIALS. CONSTRUCTION/ERECTION DRAWINGS SHALL INCLUDE MEMBER SHAPE DESIGNATIONS, LENGTHS, GRADES, LOCATIONS, CAMBER, AND CONNECTION DETAILS (USE APPLICABLE AISC AND AWS STANDARDS). USE SAME COLUMN/GRID LINES AS SHOWN HEREON.

10. PEMB MANUFACTURER SHALL PROVIDE DETAILS FOR SUSPENDING CONCENTRATED LOADS FROM ROOF FRAMING.

11. PEMB MANUFACTURER SHALL PROVIDE MEMBERS AROUND PERIMETER OF BUILDING WITH SHAPES SUITABLE FOR RECEIVING AND SUPPORTING STUD WALLS, WHERE APPLICABLE.

12. PEMB ERECTOR SHALL BE SPECIALIZED IN ERECTING AND INSTALLING WORK SIMILAR IN MATERIAL, DESIGN AND EXTENT TO THAT INDICATED FOR THIS PROJECT, AND SHALL BE ACCEPTABLE TO THE MANUFACTURER.

13. DELIVER STRUCTURAL STEEL AND ALL OTHER METAL BUILDING SYSTEM COMPONENTS TO THE PROJECT SITE AND STORE ON PALLETS OR WOOD BLOCKING. KEEP DRY AND COVERED.

14. PRIOR TO CONCRETE PLACEMENT CONTRACTOR SHALL VERIFY THAT ANCHOR BOLTS AND WELD PLATES ARE INSTALLED AS INDICATED ON THE ANCHOR BOLT SHOP DRAWINGS.

15. FOLLOWING ERECTION, PEMB MANUFACTURER SHALL INSPECT THE BUILDING (AND RECOMMEND CORRECTIONS FOLLOWED BY REINSPECTIONS, AS REQUIRED) AND PROVIDE ENGINEER WITH DOCUMENTATION THAT THE BUILDING HAS BEEN ERECTED IN ACCORDANCE WITH THE CONSTRUCTION DOCUMENTS.

PRE-ENGINEERED CANOPIES

1. PRE-ENGINEERED ($\frac{1}{4}$:12) CANOPIES SHALL BE "PERSONNEL DOOR CANOPIES", 4' PROJECTION, AS MANUFACTURED BY METALLIC PRODUCTS (SEE MPVENT.COM), OR A/E-APPROVED EQUAL. INSTALL IN ACCORDANCE WITH MANUFACTURER'S RECOMMENDATIONS.

2. REF. GENERAL ABOVE FOR LOADING CRITERIA.

3. REF. ARCHITECT FOR ADDITIONAL INFORMATION.

MISCELLANEOUS STRUCTURAL STEEL

1. MISCELLANEOUS STRUCTURAL STEEL SHALL CONFORM TO THE FOLLOWING ASTM SPECIFICATIONS:

ASTM A36, A992 OR A572 GR. 36/50	ANGLES, CHANNELS AND THREADED ROD
ASTM A500, GR. B	HSS TUBE SHAPES
ASTM A501 OR A53 GR B	PIPE COLUMN
ASTM A36 OR A572 GR. 36/50	ALL PLATE

2. ALL WELDS SHALL BE IN ACCORDANCE WITH AWS D1.1 USING E70 ELECTRODES. WELDERS SHALL BE AWS-CERTIFIED TO PERFORM THE WORK IN ACCORDANCE WITH AWS D1.1.

3. ALL STEEL ELEMENTS SHALL BE FULL-LENGTH, WITHOUT SPLICES, UNLESS SHOWN OTHERWISE ON THE DRAWINGS. SPLICING STRUCTURAL MEMBERS WHERE NOT DETAILED ON THE DRAWINGS IS PROHIBITED WITHOUT PRIOR WRITTEN APPROVAL OF THE STRUCTURAL ENGINEER.

4. UNLESS OTHERWISE NOTED, ALL HSS TUBE AND PIPE SHALL HAVE 1/4" END CAP PLATES.

5. WELD FILLET, FLARE-V, OR GROOVE WELD FULL-LENGTH OR ALL-AROUND (ALL METAL-TO-METAL CONTACT SURFACES) WHERE SPECIFIC WELDS ARE NOT OTHERWISE SPECIFIED. WELD SIZE TO MATCH THICKNESS OF MATERIAL TO BE WELDED.

6. SHOP DRAWINGS SHALL BE SUBMITTED TO ARCHITECT AND ENGINEER (A/E) FOR REVIEW, SHALL BE DRAWN TO SCALE, AND SHALL INCLUDE ALL MEMBER SIZES, DIMENSIONS AND CONNECTIONS.

COLD-FORMED STEEL

1. COLD-FORMED STEEL FRAMING SHALL BE WITH AISI-STANDARD SHAPES CONFORMING TO ASTM C955 AND A1003. COLD-FORMED STEEL FRAMING WITH THICKNESSES OF 20 TO 18 GAUGE SHALL HAVE A MINIMUM YIELD STRENGTH OF 33,000 PSI. COLD-FORMED STEEL FRAMING WITH THICKNESSES OF 16 TO 12 GAUGE SHALL HAVE A MINIMUM YIELD STRENGTH OF 50,000 PSI. INSTALLATION SHALL CONFORM TO ASTM C1007.

2. COLD-FORMED STEEL FRAMING SHALL BE GALVANIZED IN ACCORDANCE WITH ASTM A924, WITH A MINIMUM COATING CLASS OF G60 AS DEFINED BY ASTM A653.

3. CONNECTION SCREWS SHALL BE GALVANIZED, SELF-TAPPING AND SHALL CONFORM TO ASTM C-1513.

4. ALL WELDS SHALL BE IN ACCORDANCE WITH AWS D1.3. WELDERS SHALL BE AWS-CERTIFIED TO PERFORM THE WORK IN ACCORDANCE WITH AWS D1.3.

5. ALL FRAMING MEMBERS SHALL BE FULL-LENGTH, WITHOUT SPLICES, UNLESS SHOWN OTHERWISE ON THE DRAWINGS. SPLICING FRAMING MEMBERS WHERE NOT OTHERWISE DETAILED ON THE DRAWINGS IS PROHIBITED WITHOUT PRIOR WRITTEN APPROVAL OF THE STRUCTURAL ENGINEER.

6. FASTEN USING CLIPS, SCREWS OR WELDS AS SHOWN ON THE DRAWINGS AND IN ACCORDANCE WITH MANUFACTURER'S RECOMMENDATIONS.

7. POWDER ACTUATED FASTENERS SHALL BE SIMPSON PDP 0.145" SHANK DIAMETER, OR ENGINEER-APPROVED EQUAL, AS FOLLOWS:

CONNECTION	MAXIMUM SPACING	MINIMUM PENETRATION
TO CONCRETE OR MASONRY	10"	7/8"
TO STEEL	12"	ENTIRE POINTED PORTION OF FASTENER

   POWDER ACTUATED FASTENERS SHALL NOT BE DRIVEN INTO CONCRETE OR GROUT UNTIL THE CONCRETE OR GROUT HAS REACHED ITS 28-DAY DESIGN COMPRESSIVE STRENGTH. INSTALL ACCORDING TO MANUFACTURER'S RECOMMENDATIONS.

8. INSTALL HORIZONTAL WALL BLOCKING AT 60" MAX. O.C.

9. INSTALL CORNERS WITH A MINIMUM OF TWO (2) STUDS. INSTALL DOUBLE STUDS AT DOOR AND WINDOW JAMBS. INSTALL INTERMEDIATE STUDS AT THE SPACING SPECIFIED FOR ADJACENT, FULL-HEIGHT STUDS ABOVE AND BELOW OPENINGS.

10. WALL AND RIM TRACK SHALL BE INSTALLED AT THE TOPS AND BOTTOMS OF WALLS AND AT THE ENDS OF ALL JOISTS (EXCEPT JOISTS WITH HANGER CONNECTIONS). UNLESS NOTED OTHERWISE, THICKNESS OF WALL AND RIM TRACK SHALL MATCH THE CONNECTED STUD OR JOIST THICKNESS (GAUGE). EACH STUD OR JOIST SHALL BE CONNECTED TO RIM TRACK WITH (1)#10 STS THROUGH EACH FLANGE OF TRACK.

11. UNLESS NOTED OTHERWISE, HEADERS AND BEAMS SHALL BE SUPPORTED BY ONE (1) BEARING STUD (TRIMMER) EACH END. HEADERS SUPPORTED BY ONLY CONNECTION PLATES WILL BE REJECTED. AT LEAST ONE (1) FULL-WALL-HEIGHT STUD SHALL BE INSTALLED ADJACENT TO EACH TRIMMER. SEE BELOW FOR ADDITIONAL PLY REQUIREMENTS FOR STUDS HAVING A THICKNESS LESS THAN 20 GA.

12. FIELD CUTTING OR NOTCHING OF FLANGES OR LIPS OF JOISTS IS PROHIBITED. FIELD CUTTING OF HOLES IN WEBS IS ALLOWED, PROVIDED:
   12.1. HOLES ARE CUT WITH ROUNDED CORNERS HAVING A MINIMUM RADIUS OF 1",
   12.2. HOLES ARE CENTERED OVER WEB, OR DEPTH OF THE MEMBER,
   12.3. HOLES ARE LOCATED NO CLOSER THAN 10" (CLEAR) FROM NEAR EDGE OF SUPPORTS,
   12.4. HOLES ARE SPACED (CLEAR) AT LEAST 24",
   12.5. HOLE DEPTH (ALONG THE HEIGHT, OR DEPTH, OF THE MEMBER) AND HOLE LENGTH (ALONG THE LENGTH OF THE MEMBER) DO NOT EXCEED THE FOLLOWING:

MEMBER SIZE	MAX. HOLE DEPTH	MAX. HOLE LENGTH
350CS THROUGH 800CS	1½"	4"
1000CS AND 1200 CS	4"	6"

13. INSTALL SIMPSON JOIST HANGERS IN ACCORDANCE WITH MANUFACTURER'S RECOMMENDATIONS.

14. UNLESS SHOWN OTHERWISE NOTED ON THE DRAWINGS, WALL STUDS SHALL BE SIZED ACCORDING TO THE TABLE BELOW. "DRYWALL STUDS" OR STUDS HAVING A THICKNESS LESS THAN 20 GA. MAY NOT BE USED IN LOAD-BEARING WALLS (E.G., BENEATH MEZZANINES), OR IN WALLS NOT RECEIVING GYPSUM BOARD SHEATHING ON BOTH SIDES. IN ADDITION, 6" STUDS HAVING A THICKNESS LESS THAN 20 GA. ARE PROHIBITED. INSTALL DOUBLE STUDS FOR FULL WALL HEIGHT (IN ADDITION TO TRIMMERS) ADJACENT TO DOOR OPENINGS IN WALLS CONSTRUCTED WITH STUDS HAVING A THICKNESS LESS THAN 20 GA.

INTERIOR WALL COLD-FORMED STEEL STUD SCHEDULE

STUD SIZE/DESIGNATION	MAX. WALL HEIGHT (SPAN OR STUD LENGTH) FOR GIVEN SPACING	
	12" O.C.	16" O.C.
362CS1.25x018 (25 GA.)	12'-5"	11'-3"
362CS1.625x033 (20 GA.)	16'-10"	15'-4"
362CS1.625x043 (18 GA.)	18'-4"	16'-8"
362CS1.625x054 (16 GA.)	19'-8"	17'-10"
600CS1.625x033 (20 GA.)	25'-0"	22'-8"
600CS1.625x043 (18 GA.)	27'-3"	24'-9"
600CS1.625x054 (16 GA.)	29'-2"	26'-6"

TABLE NOTES:
1. STUDS PROPERLY SUPPORTED EACH END AND FLANGES FULLY BRACED BY SHEATHING EACH SIDE.
2. MAXIMUM PUNCHOUT WIDTH (CENTERED IN STUD WEB) = 1½".
3. STUD SIZE/DESIGNATION KEY IS AS FOLLOWS:
   600CS1.625x043
   - STEEL THICKNESS (MILS)
   - FLANGE WIDTH (INCHES)
   - SECTION SHAPE: CS = CHANNEL WITH FLANGE LIPS; CU = CHANNEL WITHOUT FLANGE LIPS; T = TRACK
   - SECTION DEPTH (100THS OF AN INCH)

15. CONTRACTOR SHALL SUBMIT COLD-FORMED STEEL SHAPE, GRADE, AND CONNECTION HARDWARE INFORMATION, INCLUDING ASSOCIATED LOCATIONS/APPLICATIONS, TO A/E FOR REVIEW PRIOR TO ORDERING OF MATERIALS.

MEZZANINE FLOOR DECK

1. FLOOR DECKING SHALL BE CLEARLY GRADEMARKED SHOWING GRADE AND SPAN RATINGS AND SHALL MEET THE REQUIREMENTS OF APA-RATED DECKING.

2. FLOOR DECKING SHALL BE APA-RATED STURD-I-FLOOR HAVING A THICKNESS OF ¾" AND A MINIMUM SPAN RATING OF 24".

3. FLOOR DECKING SHALL BE LAID PERPENDICULAR TO SUPPORTS WITH STAGGERED JOINTS, SHALL BE CONTINUOUS OVER TWO OR MORE SUPPORTS, AND SHALL BE SCREWED TO FLOOR JOISTS WITH #10x2" DECK SCREWS, 12" TYPICAL SPACING. SCREWS SHALL BE LOCATED NO CLOSER THAN 3/8" FROM PANEL EDGE.

REVISIONS

NO.	DESCRIPTION	DATE

PETER LEWIS
ARCHITECT + ASSOCIATES
334 West Water Street Kerrville, TX 78028
(830) 896-4220 Fax (830) 896-4226
www.pwlarchitect.com

MAXWELL
ENGINEERING, PLLC
Structural | Geotechnical | Civil | Forensic
Since 1999 • Texas Registered Engineering Firm F-943
911 Panorama Drive • Kerrville, Texas 78028
Office 830.895.0032 • maxeng@ktc.com

STATE OF TEXAS
JIM MAXWELL
80643
REGISTERED PROFESSIONAL ENGINEER

THE SEAL APPEARING ON THIS DRAWING WAS AUTHORIZED BY JIM MAXWELL, P.E. ON OCTOBER 21, 2016.

CITY OF KERRVILLE TEXAS 1889

City of Kerrville Athletic Complex Field House

Kerrville, Texas

NOT PUBLISHED. ALL RIGHTS RESERVED BY THE ARCHITECT. DRAWINGS AND SPECIFICATIONS AS INSTRUMENTS OF SERVICE ARE AND SHALL REMAIN THE PROPERTY OF THE ARCHITECT. THEY SHALL NOT BE USED ON OTHER PROJECTS OR EXTENSIONS TO THIS PROJECT EXCEPT BY AGREEMENT IN WRITING AND WITH APPROPRIATE COMPENSATION TO THE ARCHITECT. CONTRACTOR IS RESPONSIBLE FOR THE CONFIRMING AND CORRELATING DIMENSIONS AT JOB SITE, THE ARCHITECT WILL NOT BE RESPONSIBLE FOR CONSTRUCTION MEANS, METHODS, TECHNIQUES, SEQUENCES OR FOR SAFETY PRECAUTIONS AND PROGRAMS IN CONNECTION WITH THE PROJECT.

PROJECT NO.	DATE
20-1605	10/21/16

General Structural Notes

SHEET NUMBER
S4.1

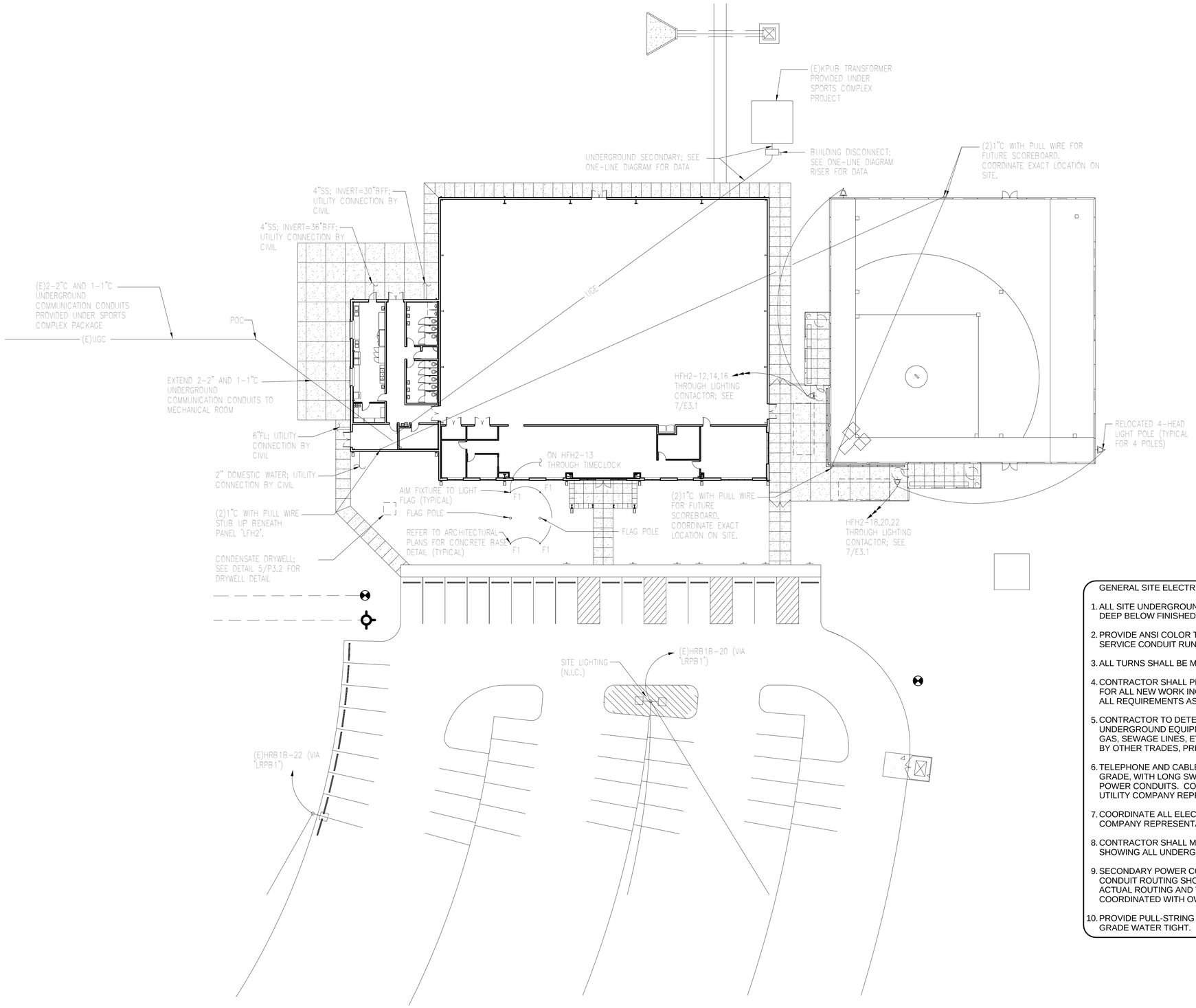

1 Mechanical, Electrical and Plumbing Site Plan

1" = 20'-0"

GENERAL SITE ELECTRICAL NOTES

1. ALL SITE UNDERGROUND CONDUIT SHALL BE BURIED A MINIMUM OF 24 INCHES DEEP BELOW FINISHED GRADE UNLESS OTHERWISE NOTED.
2. PROVIDE ANSI COLOR TAPE FOR IDENTIFICATION AT 18 INCHES DEEP ABOVE SERVICE CONDUIT RUNS.
3. ALL TURNS SHALL BE MADE WITH LONG SWEEP ELLS.
4. CONTRACTOR SHALL PROVIDE ALL EXCAVATING AND BACK FILLING REQUIRED FOR ALL NEW WORK INCLUDING FILL, COMPACTION, SURFACE, ETC. TO MEET ALL REQUIREMENTS AS APPLICABLE FOR THE AREA.
5. CONTRACTOR TO DETERMINE THE PRESENCE AND LOCATION OF ANY UNDERGROUND EQUIPMENT SUCH AS TELEPHONE, ELECTRIC POWER, WATER, GAS, SEWAGE LINES, ETC. WHETHER PREVIOUSLY EXISTING OR AS INSTALLED BY OTHER TRADES, PRIOR TO THE START OF CONSTRUCTION.
6. TELEPHONE AND CABLE TV CONDUITS SHALL BE BURIED 24" MINIMUM BELOW GRADE, WITH LONG SWEEP TURNS AND A MINIMUM SEPARATION OF 2'-0" FROM POWER CONDUITS. COORDINATE ALL SERVICE CONDUIT ROUTING WITH UTILITY COMPANY REPRESENTATIVES.
7. COORDINATE ALL ELECTRICAL SERVICE REQUIREMENTS WITH POWER UTILITY COMPANY REPRESENTATIVE PRIOR TO BEGINNING WORK.
8. CONTRACTOR SHALL MAINTAIN AN AS-BUILT DIMENSIONAL DRAWING ON SITE SHOWING ALL UNDERGROUND CONDUIT ROUTING AND TERMINATION POINTS.
9. SECONDARY POWER CONDUIT, TELEPHONE SERVICE CONDUIT, AND CABLE TV CONDUIT ROUTING SHOWN ON THESE DRAWINGS ARE FOR REFERENCE ONLY. ACTUAL ROUTING AND TERMINATION POINTS SHALL BE VERIFIED AND COORDINATED WITH OWNER AND LOCAL UTILITIES PRIOR TO START OF WORK.
10. PROVIDE PULL-STRING IN ALL EMPTY CONDUITS. CAP CONDUITS BELOW GRADE WATER TIGHT.

STATE OF TEXAS
BRUCE CECIL SMITH
68595
REGISTERED PROFESSIONAL ENGINEER
6-30-17
10/21/16

ESA Mechanical & Electrical Engineering, Inc.
1100 NW Loop 410, Suite 810 210.342.3483
San Antonio, Texas 78213 F 210.342.3641
TBPE FIRM REGISTRATION NO. F-4137
JOB NO.: 16022

REVISIONS

NO.	DESCRIPTION	DATE

PETER LEWIS
ARCHITECT + ASSOCIATES
334 West Water Street Kerrville, TX 78028
(830) 896-4220 (830) 896-4226
www.pwlarchitect.com

CITY OF KERRVILLE 1889 TEXAS

City of Kerrville Athletic Complex Field House

Kerrville, Texas

NOT PUBLISHED. ALL RIGHTS RESERVED BY THE ARCHITECT. DRAWINGS AND SPECIFICATIONS AS INSTRUMENTS OF SERVICE ARE AND SHALL REMAIN THE PROPERTY OF THE ARCHITECT. THEY SHALL NOT BE USED ON OTHER PROJECTS OR EXTENSIONS TO THIS PROJECT, EXCEPT BY AGREEMENT IN WRITING AND APPROPRIATE COMPENSATION TO THE ARCHITECT. CONTRACTOR IS RESPONSIBLE FOR THE CONFIRMING AND CORRELATING DIMENSIONS AT JOB SITE. THE ARCHITECT WILL NOT BE RESPONSIBLE FOR CONSTRUCTION MEANS, METHODS, TECHNIQUES, SEQUENCES OR FOR SAFETY PRECAUTIONS AND PROGRAMS IN CONNECTION WITH THE PROJECT.

PROJECT NO.	DATE
20-1605	10/21/16

Mech., Elec. and Plumbing Site Plan

SHEET NUMBER

MEP1.1

10/21/2016 2:57:51 PM

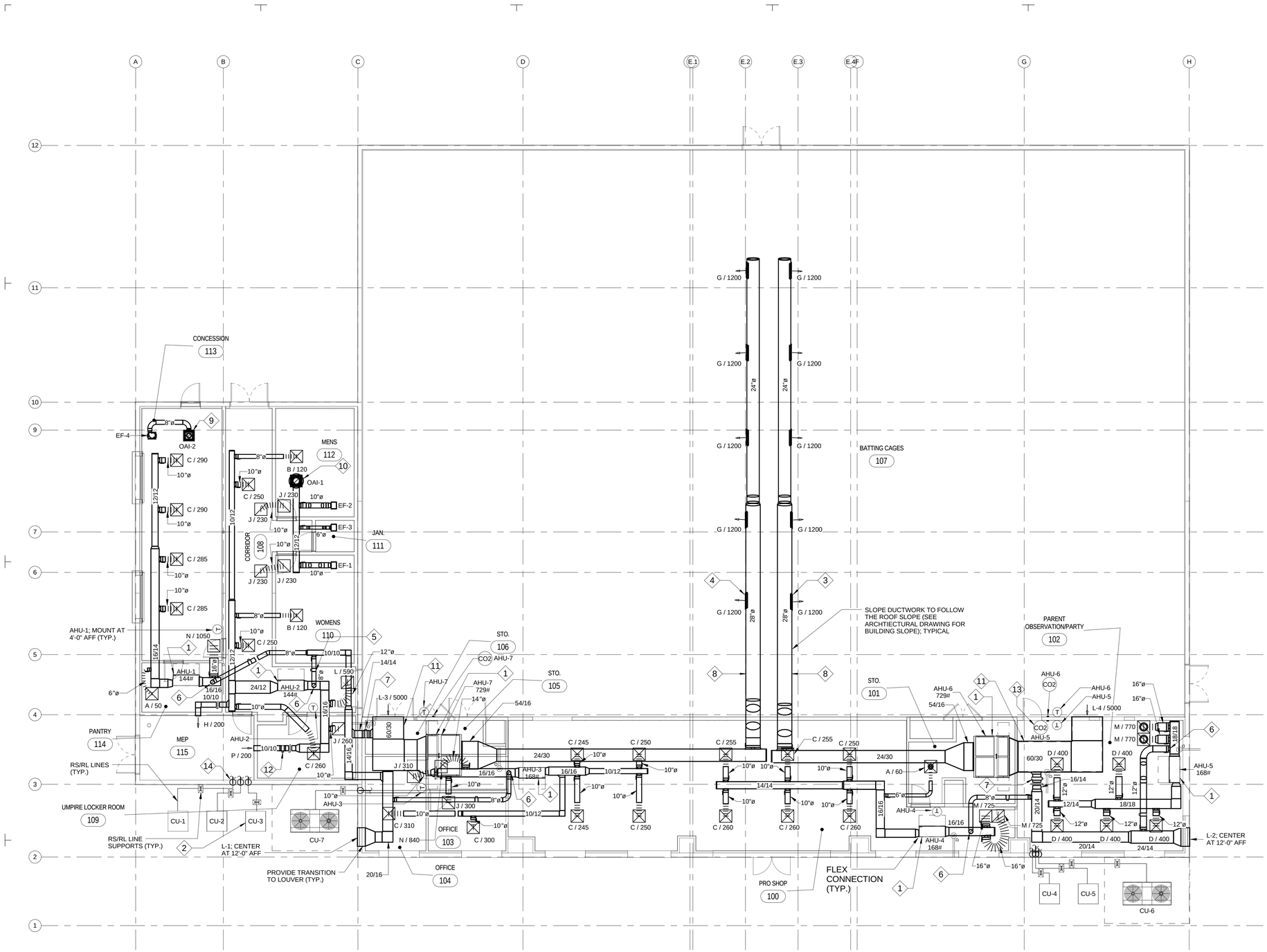

1 Mechanical Plan
1/8" = 1'-0"

MECHANICAL KEYED NOTES ◇ : (SHEET M1.1 ONLY)

1. LINE OF 0'-2" DEEP GALVANIZED SHEET METAL SECONDARY DRAIN PAN WITH BECKETT FLOAT CONTROL/SAFETY SWITCH (GRAINGER MODEL# 2P874) PROVIDED BY CONTRACTOR; WIRE SWITCH TO SHUT DOWN CORRESPONDING AHU FAN UPON DETECTING CONDENSATE WATER RISING LEVEL IN LOWEST PART OF CONDENSATE DRAIN PAN.
2. 0'-3-1/2" THICK HOUSE KEEPING PAD PROVIDED BY GENERAL CONTRACTOR (TYP. FOR 7).
3. INSTALL DIFFUSER AND TAP AT 4 O'CLOCK (TYP. FOR 5).
4. INSTALL DIFFUSER AND TAP AT 8 O'CLOCK (TYP. FOR 5).
5. OUTSIDE AIR MOTORIZED DAMPER OPENS WHEN FAN IS ON AND CLOSES WHEN FAN IS OFF (TYP. FOR 7).
6. 8" ROUND OA DROP INTO TOP OF RETRUN AIR DUCT.
7. 16/14 OA DUCT CONNECT TO RETURN AIR DUCT WITH MOTORIZED DAMPER.
8. ALL EXPOSED DUCTWORK SHALL BE INRENALLY LINED WITH 1" THICK INSULATION FOR SOUND ATTENUATION.
9. 8/8 EA RISER UP TO ROOFCAP.
10. 12/12 EA RISER UP TO ROOFCAP.
11. DUCTWORK SHALL BE INRENALLY LINED WITH 1" THICK INSULATION FOR SOUND ATTENUATION.
12. MOTORIZED DAMPER TO CLOSE UPON CALL FOR HEATING AHU-2 THERMOSTAT. COORDINATE WITH ELECTRICAL CONTRACTOR FOR POWER TO DAMPER TRANSFORMER. MECHANICAL CONTRACTOR SHALL PROVIDE DAMPER, MOTOR AND TRANSFORMER.
13. OUTSIDE AIR MOTORIZED DAMPER OPENS TO MINIMUM POSITION (200 CFM) UPON AHU STARTUP. WHEN CO2 LEVEL IN SPACE RISES ABOVE 1000 PPM, MOTORIZED DAMPER SHALL OPEN TO SATISFY ADDITIONAL OUTSIDE AIR REQUIREMENT. WHEN FAN IS OFF, DAMPER SHALL CLOSE TO SHUT POSITION (TYP. FOR 3).
14. RS/RL LINES PENETRATE EXTERIOR WALL. RISE RS/RL LINE INSIDE THE WALL. EXTEND LINE ABOVE CEILING AND ROUTE TO APPROPRIATE AIR HANDLING UNIT. SEAL OPENING IN WALL AROUND RS/RL LINE AND MAKE WEATHERTIGHT (TYP. FOR 7).

GENERAL MECHANICAL NOTE:

MAINTAIN A MINIMUM OF 10'-0" HORIZONTAL OR 3'-0" VERTICAL DISTANCE BETWEEN OUTSIDE AIR INTAKES AND ANY VTS, EF AND FLUES.

REVISIONS

NO.	DESCRIPTION	DATE

PETER LEWIS
ARCHITECT + ASSOCIATES
334 West Water Street
Kerrville, TX 78028
(830) 896-4220
(830) 896-4226
www.pwlarchitect.com

CITY OF KERRVILLE 1889 TEXAS

City of Kerrville Athletic Complex Field House

Kerrville, Texas

NOT PUBLISHED. ALL RIGHTS RESERVED BY THE ARCHITECT. DRAWINGS AND SPECIFICATIONS AS INSTRUMENTS OF SERVICE ARE AND SHALL REMAIN THE PROPERTY OF THE ARCHITECT. THEY SHALL NOT BE USED ON OTHER PROJECTS OR EXTENSIONS TO THIS PROJECT EXCEPT BY AGREEMENT IN WRITING AND WITH APPROPRIATE COMPENSATION TO THE ARCHITECT. THE CONTRACTOR SHALL VERIFY AND BE RESPONSIBLE FOR CONFIRMING AND CORRELATING DIMENSIONS AT JOB SITE. THE ARCHITECT WILL NOT BE RESPONSIBLE FOR CONSTRUCTION MEANS, METHODS, TECHNIQUES, SEQUENCES OR FOR SAFETY PRECAUTIONS AND PROGRAMS IN CONNECTION WITH THE PROJECT.

PROJECT NO.	DATE
20-1605	10/21/16

Mechanical Plan

SHEET NUMBER

M1.1

STATE OF TEXAS
BRUCE CECIL SMITH
68595
REGISTERED PROFESSIONAL ENGINEER
6-30-17
10/21/16

ESA Mechanical & Electrical Engineering, Inc.
1100 NW Loop 410, Suite 810
San Antonio, Texas 78213
210.342.3483
F 210.342.3641
TBPE FIRM REGISTRATION NO. F-4137
JOB NO.: 16022

10/21/2016 2:57:46 PM

AIR DEVICE SCHEDULE

MARK	CFM RANGE	●SUPPLY	RETURN	EXHAUST▸	NECK SIZE	THROW	DAMPER	LOCATION	REMARKS (TITUS MODEL #)
A	5-105	●			6"ø	4-W	NO	LAY-IN CEILING	TMS, TYPE 3 FRAME 24"X24" MODULE
B	110-195	●			8"ø	4-W	NO	LAY-IN CEILING	TMS, TYPE 3 FRAME 24"X24" MODULE
C	200-360	●			10"ø	4-W	NO	LAY-IN CEILING	TMS, TYPE 3 FRAME 24"X24" MODULE
D	365-470	●			12"ø	4-W	NO	LAY-IN CEILING	TMS, TYPE 3 FRAME 24"X24" MODULE
E	5-105	●			6"ø	4-W	YES	SURFACE	TMS, TYPE1 FRAME 12"X12" MODULE
F	110-195	●			8"ø	---	YES	SURFACE	TMS, TYPE1 FRAME 12"X12" MODULE
G	1200	●			36"X10"	---	YES	DUCT	300RL; 22-1/2° DEFLECTION
H	200-340	●			10"X10"	---	YES	WALL	300RL; 22-1/2° DEFLECTION
J	200-340		●		10"ø	---	NO	LAY-IN CEILING	PAR, TYPE 3 FRAME 24"X24" MODULE
K	345-470		●		12"ø	---	NO	LAY-IN CEILING	PAR, TYPE 3 FRAME 24"X24" MODULE
L	475-640		●		14"ø	---	NO	LAY-IN CEILING	PAR, TYPE 3 FRAME 24"X24" MODULE
M	645-830		●		16"ø	---	NO	LAY-IN CEILING	PAR, TYPE 3 FRAME 24"X24" MODULE
N	835-1350		●		18"X18"	---	NO	LAY-IN CEILING	PAR, TYPE 3 FRAME 24"X24" MODULE
P	100-200		●		10"X8"	---	NO	WALL	350RL

NOTE: NOT ALL MARKS MAY BE USED.

EQUIVALENT MANUFACTURERS: METAL-AIRE, ANEMOSTAT, KRUEGER AND PRICE

OUTSIDE AIR INTAKE

MARK	TYPE		MAX. CFM	MAX. △ (IN.WG.)	THROAT (W x L)	OPER. WT.	REMARKS (COOK MODEL #)
	INTAKE	RELIEF					
OAI-1		●	750	0.15"	15-1/2"X15-1/2"	43#	12PR (1) (2)
OAI-2		●	150	0.15"	13-1/2"X13-1/2"	43#	8PR (1) (2)

(1) UNIT SHALL BE FURNISHED WITH FACTORY BIRDSCREEN, BACKDRAFT DAMPER AND SLOPED ROOF CURB (SEE ARCH. DRAWING FOR BUILDING SLOPE.)

(2) ROOF CURB UNIT SHALL BE FURNISHED BY MECHANICAL CONTRACTOR AND INSTALLED BY ROOFING CONTRACTOR.

EQUIVALENT MANUFACTURERS: GREENHECK, ACME, BREIDERT AND PENN VENTILATOR

LOUVER SCHEDULE

MARK	CFM	MAX SP	●INTAKE	RELIEF▸	SIZE	FREE AREA	DAMPER	LOCATION	REMARKS (RUSKIN MODEL #)
L-1	1450	0.15"	●		36"X18"	1.57 ft²	NO	WALL	EME52ODD (1)
L-2	1610	0.15"	●		36"X18"	1.57 ft²	NO	WALL	EME52ODD (1)
L-3	5000-6000	0.16"	●		60"X30"	6.63 ft²	NO	WALL	ELF375X (2)
L-4	5000-6000	0.16"	●		60"X30"	6.63 ft²	NO	WALL	ELF375X (2)

(1) UNIT SHALL BE FURNISHED WITH FACTORY KYNAR FINISH (COLOR SELECTION BY ARCHITECT DURING SUBMITTAL PHASE), EXTENDED SILL AND 3/4" X 0.051" ALUMINUM BIRDSCREEN.

(2) COLOR SELECTION BY ARCHITECT DURING SUBMITTAL PHASE.

EQUIVALENT MANUFACTURER: GREENHECK AND LOUVERS AND DAMPERS

OUTSIDE AIR SCHEDULE

UNIT	AREA SERVED	AREA	CFM/PEOPLE	CFM/SF	NO. PEOPLE	O/A REQUIRED	O/A PROVIDED
AHU-1	CONCESSION	640	20	0	6	120	150
AHU-2	RR/CORRIDORS/ LOCKER RM/ STORAGE	1304	20	0.05	2	105	150
AHU-3	PRO SHOP/OFFICE	976	20	0	8	160	150
AHU-4	PRO SHOP/STORAGE	204	20	0.15	6	150	150
AHU-5	PARENT OBSERVATION	559	15	0	30	450	460
AHU-6 & AHU-7	BATTING CAGES	12,245	20	0	100	2000	2000
	BUILDING TOTAL					2985	3060

NOTES:

1. MINIMUM OA CALCULATION BASE ON TABLE 403.3, CITY OF KERRVILLE AMENDMENT TO THE 2006 INTERNATIONAL MECHANICAL CODE. (CFM/PER) * (# OF PEOPLE) + (CFM/SQ.FT.) * (SQ.FT.) = OA REQUIRED

HEAT PUMP CONDENSING UNIT SCHEDULE

MARK	TOT.MBTUH/ SENS.MBTUH (1)	NOM. CAPACITY	AMBIENT TEMP.	MIN. EFFICY. (NOM)	ELEC V/Ø/FLA	MCA	MOCP	OPER. WT	REMARKS (TRANE MODEL #)
CU-1	34.6/29.0	3.0 TON	105°F	17.0 SEER	460/3/6.1	8.0	15	257#	4TWA7036 (2) (3)
CU-2	34.6/29.0	3.0 TON	105°F	17.0 SEER	460/3/6.1	8.0	15	257#	4TWA7036 (2) (3)
CU-3	43.5/35.9	4.0 TON	105°F	17.0 SEER	460/3/7.0	9.0	15	292#	4TWA7048 (2) (3)
CU-4	43.5/35.9	4.0 TON	105°F	17.0 SEER	460/3/7.0	9.0	15	292#	4TWA7048 (2) (3)
CU-5	53.5/42.3	5.0 TON	105°F	16.0 SEER	460/3/8.32	10.0	15	293#	4TWA7060 (2) (3)
CU-6	149.6/135.0	15.0 TON	105°F	12.2 EER (5)	460/3/30.2	33.4	40	898#	TWA180E4 (2) (3) (4)
CU-7	149.6/135.0	15.0 TON	105°F	12.2 EER (5)	460/3/30.2	33.4	40	898#	TWA180E4 (2) (3) (4)

(1) AT 105°F AMBIENT AND CORRESPONDING AHU COIL ENTERING AIR TEMPERATURE.

(2) UNIT SHALL BE FURNISHED WITH ANTI-SHORT CYCLE TIMER, EVAPORATOR DEFROST CONTROL, TIME DELAY RELAY, LOW AMBIENT KIT, CRANK CASE HEATER, AND LOUVERED COIL GUARD.

(3) REFRIGERANT LINE SIZES PER MANUFACTURER'S RECOMMENDATION.

(4) UNIT SHALL BE FURNISHED WITH DUAL REFRIGERANT CIRCUIT.

(5) EER @ AHRI CONDITIONS (CONDENSING UNIT ONLY).

EQUIVALENT MANUFACTURERS: CARRIER, YORK AND LENNOX

EXHAUST FAN SCHEDULE

MARK	AREA SERVED	CFM	ESP IN. WG	DRIVE	ELEC. V/Ø	TYPE	SONES	CONTROL WITH	OPER. WT.	REMARKS (COOK MODEL #)
EF-1	WOMENS 110	375	0.375"	DIRECT	115/1/ 201W	CEILING EXHAUST	3.2	INTERLOCK WITH LIGHT SWITCH	35#	GC-620 (1)
EF-2	MENS 112	375	0.375"	DIRECT	115/1/ 201W	CEILING EXHAUST	3.2	INTERLOCK WITH LIGHT SWITCH	35#	GC-620 (1)
EF-3	MENS 111	50	0.375"	DIRECT	115/1/ 40W	CEILING EXHAUST	1.9	INTERLOCK WITH LIGHT SWITCH	15#	GC-142 (1)
EF-4	CONCESSION	150	0.375"	DIRECT	115/1/ 208W	CEILING EXHAUST	3.1	WALL SWITCH	15#	GC-340 (1)

(1) UNIT SHALL BE U.L. LISTED, A.M.C.A. CERTIFIED AND FURNISHED WITH FACTORY WHITE POLYMER GRILLE, SPEED CONTROLLER (MOUNTED IN AN ACCESSIBLE LOCATION), BACKDRAFT DAMPER, GEMINI ISOLATOR KIT, AND DISCONNECT SWITCH.

EQUIVALENT MANUFACTURERS: ACME, GREENHECK, BROAN AND NUTONE.

AIR HANDLING UNIT SCHEDULE

MARK	TOTAL CFM	OUTSIDE AIR	EXT. SP. IN. WTR.	EAT	MBTUH (1) TOTAL	MBTUH (1) SENS	MBTUH HEAT AT 47°F AMB (3)	HSPF (3) (BTU/WATT-HR)	FAN HP	ELEC. V/Ø	MCA	MOCP	KW HEAT	OPER. WT.	REMARKS (TRANE MODEL#)
AHU-1	1200	150	0.5"	78.7/ 65.2	34.6	29.0	33.6	9.0	0.5	208/1 (2)	40.0 (6)	40 (6)	5.76 (6)	144#	TEM6AOC36 (8) (9) (11) (12)
AHU-2	1200	150	0.5"	78.7/ 65.2	34.6	29.0	33.6	9.0	0.5	208/1 (2)	40.0 (6)	40 (6)	5.76 (6)	144#	TEM6AOC36 (8) (9) (11) (12)
AHU-3	1600	150	0.5"	78.2/ 64.8	43.5	35.9	46.0	9.0	0.75	208/1 (2)	52.0 (6)	60 (6)	7.2 (6)	168#	TEM6AOD48 (7) (8) (9) (11) (12)
AHU-4	1600	150	0.5"	78.2/ 64.8	43.5	35.9	46.0	9.0	0.75	208/1 (2)	52.0 (6)	60 (6)	7.2 (6)	168#	TEM6AOD48 (7) (8) (9) (11) (12)
AHU-5	2000	460	0.5"	81.9/ 66.9	53.5	42.3	53.0	9.0	0.75	208/1 (2)	52.0/22.0	60.0/25.0	10.8 (6)	168#	TEM6AOD60 (7) (8) (9) (11) (12)
AHU-6	6000	1000	1.25"	80.0/ 65.8	149.6	135.0	128.6	3.2 (COP)	4.3	460/3 (2)	37.8	40.0	19.9 (5)	898#	TWE180 (4) (7) (8) (9) (10) (11)
AHU-7	6000	1000	1.25"	80.0/ 65.8	149.6	135.0	128.6	3.2 (COP)	4.3	460/3 (2)	37.8	40.0	19.9 (5)	898#	TWE180 (4) (7) (8) (9) (10) (11)

(1) AT 105°F AMBIENT AND COIL ENTERING AIR TEMPERATURE WITH CORRESPONDING CONDENSING UNIT.

(2) SINGLE POINT CONNECTION.

(3) WITH CORRESPONDING HEAT PUMP CONDENSING UNIT.

(4) UNIT SHALL BE FURNISHED WITH E-Z FILTER BASE AND 2" THICK THROWAWAY FILTERS.

(5) AT 460/3Ø.

EQUIVALENT MANUFACTURERS: CARRIER, YORK AND LENNOX

(6) AT 208V/1Ø

(7) DUCT SMOKE DETECTOR PROVIDED AND INSTALLED BY FIRE ALARM CONTRACTOR.

(8) UNIT SHALL BE FURNISHED WITH PROGRAMMABLE THERMOSTAT WITH NIGHT SET BACK.

(9) PROVIDE THERMOSTAT LOCKING COVER.

(10) MECHANICAL CONTRACTOR TO PROVIDE EXTERNAL SPRING VIBRATION ISOLATION.

(11) REMOTE CEILING MOUNTED STATUS AND ALARM INDICATOR STATION FOR DUCT SMOKE DETECTOR SHALL BE PROVIDED BY FIRE ALARM CONTRACTOR. MOUNT REMOTE INDICATOR ON RECESSED 2X4 BOX; COORDINATE EXACT LOCATION ADD SINAGE ALONG CORRIDOR CEILINGS ON SITE WITH FIRE MARSHALL.

(12) UNIT SHALL BE FURNISHED WITH E-Z FILTER BASE AND 1" THICK THROWAWAY FILTERS.

MECHANICAL LEGEND

MARK	DESCRIPTION
A/350	AIR DEVICE W/MARK, CFM
28/16	DUCT WITH DIMENSION: PLAN/DEPTH
	SUPPLY AIR SA
	RETURN AIR RA
	OUTSIDE/EXH. OR TRANSFER AIR OA/EA/TA
	RADIUS ELBOW WITH TURNING VANES
	SPLITTER DAMPER
	TRANSITION
	FLEXIBLE CONNECTION
	DUCT DROP
SD	DUCT SMOKE DETECTOR
	FLEXIBLE DUCT
	VOLUME DAMPER VD
	RETURN OR EXHAUST AIR
	DIRECTION OF AIR FLOW
1	DENOTES MECHANICAL KEYED NOTE
AFF	ABOVE FINISHED FLOOR
OA	OUTSIDE AIR
L	LOUVER
	ACCESS PANEL
CU	CONDENSING UNIT
T AHU-Z	AIR HANDLING UNIT THERMOSTAT AND ZONE
EF	EXHAUST FAN
AHU	AIR HANDLING UNIT
AC	AIR CONDITIONING UNIT
RTS	REMOTE TEMPERATURE SENSOR
FSD	COMBINATION FIRE/SMOKE DAMPER
OAI	OUTSIDE AIR INTAKE

NOTE: NOT ALL MARKS MAY BE USED.

REVISIONS

NO.	DESCRIPTION	DATE

PETER LEWIS ARCHITECT + ASSOCIATES
334 West Water Street Kerrville, TX 78028
(830) 896-4220 (830) 896-4226
www.pwlarchitect.com

CITY OF KERRVILLE 1889 TEXAS

City of Kerrville Athletic Complex Field House

Kerrville, Texas

NOT PUBLISHED. ALL RIGHTS RESERVED BY THE ARCHITECT. DRAWINGS AND SPECIFICATIONS AS INSTRUMENTS OF SERVICE ARE AND SHALL REMAIN THE PROPERTY OF THE ARCHITECT. THEY SHALL NOT BE USED ON OTHER PROJECTS OR EXTENSIONS TO THIS PROJECT EXCEPT BY AGREEMENT IN WRITING AND WITH APPROPRIATE COMPENSATION TO THE ARCHITECT. CONTRACTORS SHALL VERIFY AND BE RESPONSIBLE FOR CONFIRMING AND CORRELATING DIMENSIONS AT JOB SITE. THE ARCHITECT WILL NOT BE RESPONSIBLE FOR CONSTRUCTION MEANS, METHODS, TECHNIQUES, SEQUENCES OR FOR SAFETY PRECAUTIONS AND PROGRAMS IN CONNECTION WITH THE PROJECT.

PROJECT NO. DATE

20-1605 10/21/16

Mechanical Schedules

SHEET NUMBER

M2.1

STATE OF TEXAS BRUCE CECIL SMITH 68595 REGISTERED PROFESSIONAL ENGINEER 6-30-17

10/21/16

ESA Mechanical & Electrical Engineering, Inc.
1100 NW Loop 410, Suite 810 210.342.3483
San Antonio, Texas 78213 F 210.342.3641
TBPE FIRM REGISTRATION NO. F-4137

JOB NO.: 16022

10/21/2016 2:57:49 PM

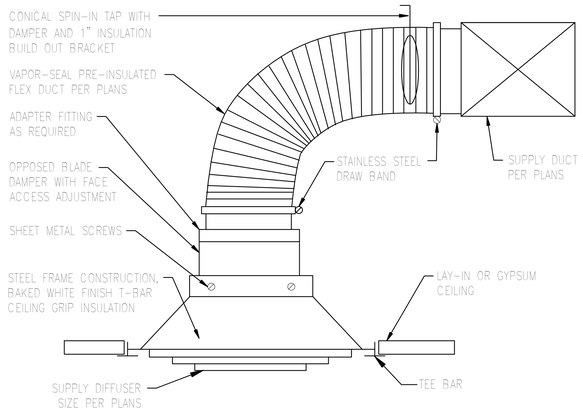

1 Flex Duct Installation
Scale: N.T.S.

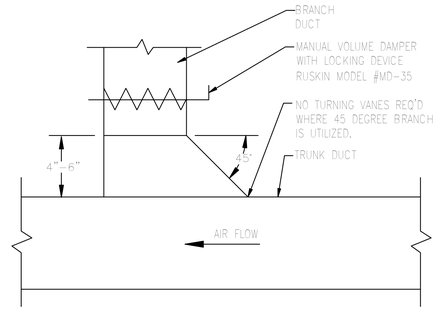

2 Branch Take Off
Scale: N.T.S.

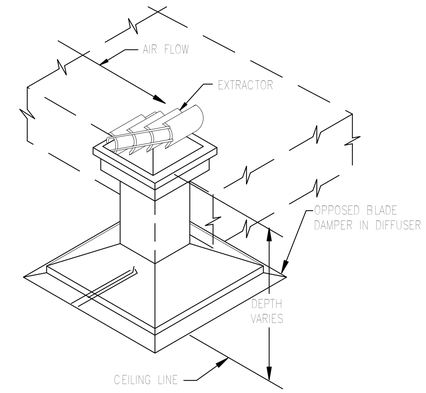

3 Diffuser Drop Detail
Scale: N.T.S.

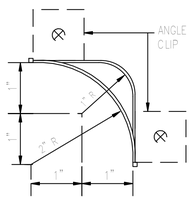

4 Turning Vane
Scale: N.T.S.

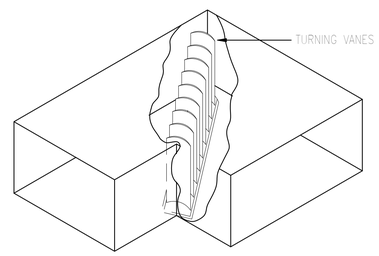

5 Elbow Detail
Scale: N.T.S.

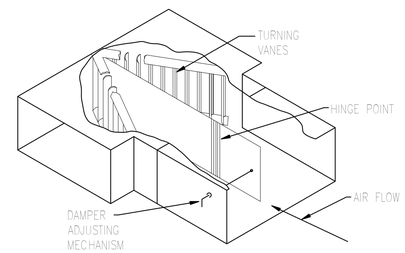

6 Spitter Damper
Scale: N.T.S.

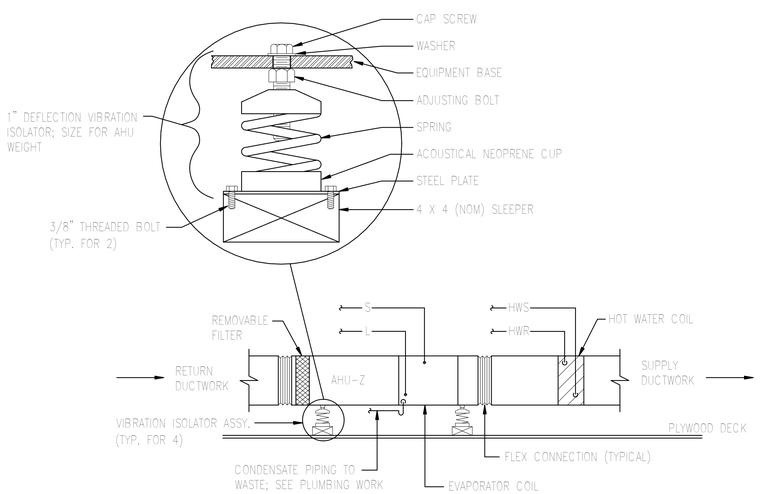

7 Air Handling Unit AHU-6 & 7 Mounting Detail
Scale: N.T.S.

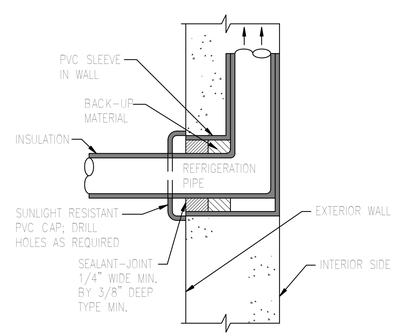

8 Pipe Sleeve For RS/RL Pipe Thru Wall
Scale: N.T.S.

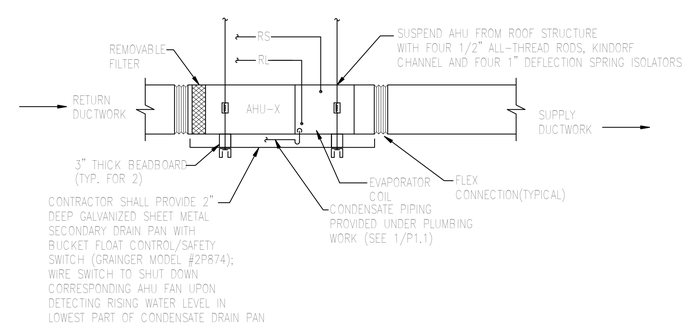

9 Air Handling Unit AHU-1 thru 5 Mounting Detail
Scale: N.T.S.

REVISIONS

NO.	DESCRIPTION	DATE

PETER LEWIS
ARCHITECT + ASSOCIATES
334 West Water Street Kerrville, TX 78028
(830) 896-4220 (830) 896-4226
www.pwlarchitect.com

CITY OF KERRVILLE 1889 TEXAS

City of Kerrville Athletic Complex Field House

Kerrville, Texas

NOT PUBLISHED. ALL RIGHTS RESERVED BY THE ARCHITECT. DRAWINGS AND SPECIFICATIONS AS INSTRUMENTS OF SERVICE ARE AND SHALL REMAIN THE PROPERTY OF THE ARCHITECT WHO PLANNED THEM. THE REPRODUCTION OF DRAWINGS PERTAINING TO THIS PROJECT EXCEPT BY AGREEMENT IN WRITING AND WITH APPROPRIATE COMPENSATION TO THE ARCHITECT. CONTRACTOR IS RESPONSIBLE FOR THE CONFIRMING AND CORRELATING DIMENSIONS AT JOB SITE. THE ARCHITECT WILL NOT BE RESPONSIBLE FOR CONSTRUCTION MEANS, METHODS, TECHNIQUES, SEQUENCES OR FOR SAFETY PRECAUTIONS AND PROGRAMS IN CONNECTION WITH THE PROJECT.

PROJECT NO.	DATE
20-1605	10/21/16

Mechanical Details

SHEET NUMBER

M3.1

STATE OF TEXAS
BRUCE CECIL SMITH
68595
REGISTERED PROFESSIONAL ENGINEER
6-30-17
10/21/16

ESA Mechanical & Electrical Engineering, Inc.
1100 NW Loop 410, Suite 810 210.342.3483
San Antonio, Texas 78213 F 210.342.3641
TBPE FIRM REGISTRATION NO. F-4137

JOB NO.: 16022

10/21/2016 2:57:50 PM

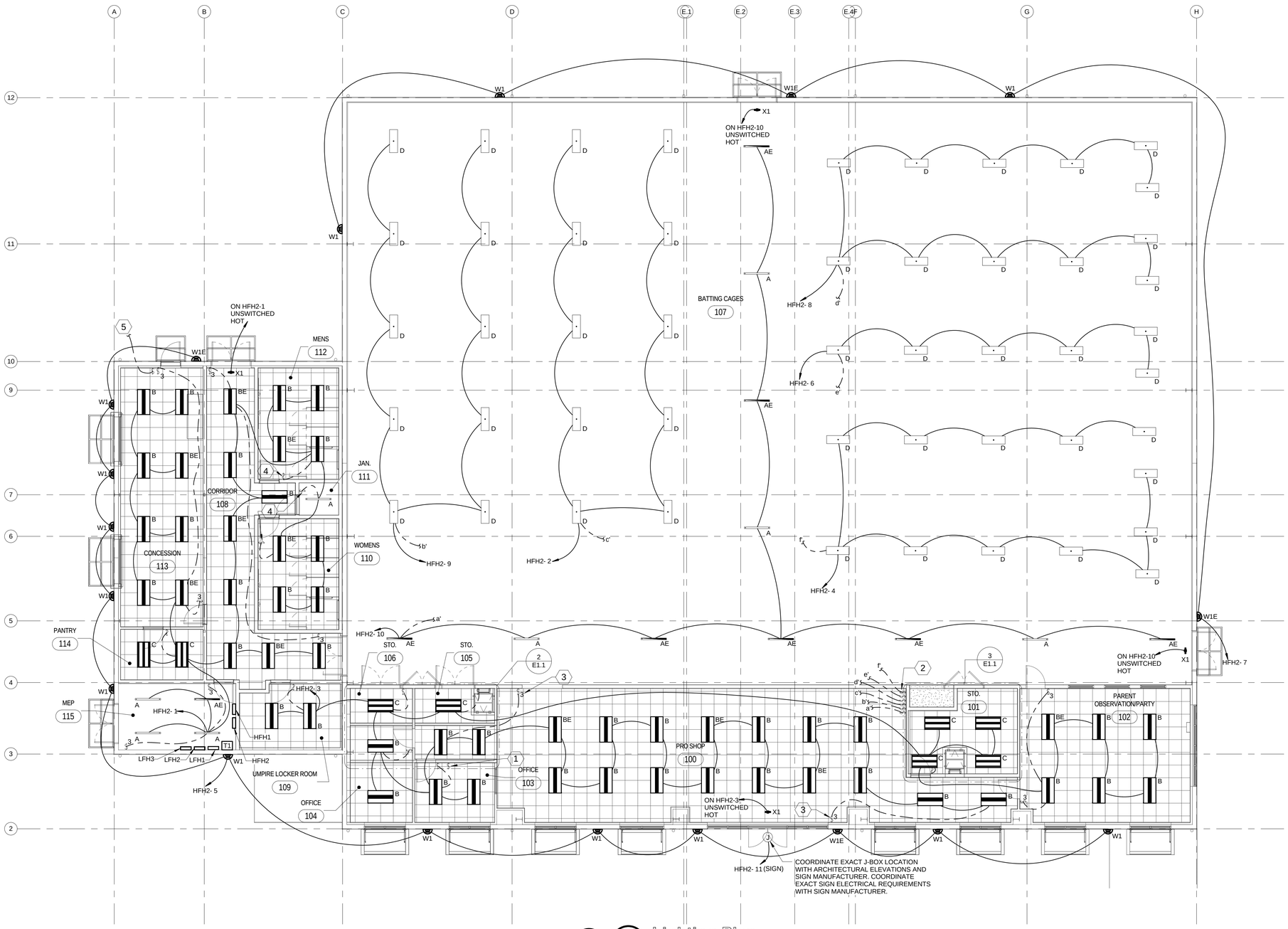

1 Lighting Plan

1/8" = 1'-0"

LIGHTING PLAN KEYED NOTES ⬡ : (1/E1.1 ONLY)

1. SWITCH FOR BALL FIELD LIGHTS. LABEL SWITCH AS "BALL FIELD LIGHTS". COORDINATE EXACT LOCATION ON SITE WITH OWNER REPRESENTATIVE.
2. BATTING CAGE SWITCH BANK. COORDINATE EXACT LOCATION WITH DBAT REPRESENTATIVE. LABEL SWITCHES FOR AREA/CAGE NUMBERS SERVED.
3. LIGHTING SWITCH FOR PRO SHOP LIGHT FIXTURES. COORDINATE EXACT LIGHT SWITCH LOCATION WITH DBAT REPRESENTATIVE.
4. INTERLOCK EXHAUST FAN WITH ROOM LIGHT SWITCH. SEE E2.1.
5. TOGGLE SWITCH FOR EF-4. SEE E2.1.

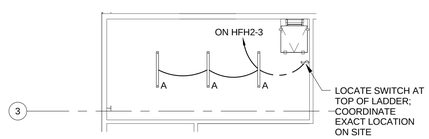

2 Mech. Mezz. (West) Lighting Plan

1/8" = 1'-0"

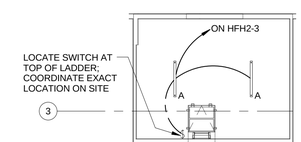

3 Mech. Mezz. (East) Lighting Plan

1/8" = 1'-0"

REVISIONS

NO.	DESCRIPTION	DATE

PETER LEWIS
ARCHITECT + ASSOCIATES
334 West Water Street
Kerrville, TX 78028
(830) 896-4220
(830) 896-4226
www.pwlarchitect.com

City of Kerrville Athletic Complex Field House

Kerrville, Texas

NOT PUBLISHED. ALL RIGHTS RESERVED BY THE ARCHITECT. DRAWINGS AND SPECIFICATIONS AS INSTRUMENTS OF SERVICE ARE AND SHALL REMAIN THE PROPERTY OF THE ARCHITECT. THEY SHALL NOT BE USED ON OTHER PROJECTS OR EXTENSIONS TO THIS PROJECT EXCEPT BY AGREEMENT IN WRITING AND WITH APPROPRIATE COMPENSATION TO THE ARCHITECT. CONTRACTOR IS RESPONSIBLE FOR THE CONSTRUCTION MEANS, METHODS, TECHNIQUES, SEQUENCES AND PROCEDURES, NOT BE RESPONSIBLE FOR CONSTRUCTION MEANS, METHODS, TECHNIQUES, SEQUENCES OR FOR SAFETY PRECAUTIONS AND PROGRAMS IN CONNECTION WITH THE PROJECT.

PROJECT NO. 20-1605

DATE 10/21/16

Lighting Plan

STATE OF TEXAS
STEPHEN MITCHELL
99313
LICENSED
PROFESSIONAL ENGINEER
10/21/16
3-31-17

ESA Mechanical & Electrical Engineering, Inc.
1100 NW Loop 410, Suite 810
San Antonio, Texas 78213
210.342.3483
F 210.342.3641
TBPE FIRM REGISTRATION NO. F-4137
JOB NO.: 16022

SHEET NUMBER

E1.1

10/21/2016 2:56:41 PM

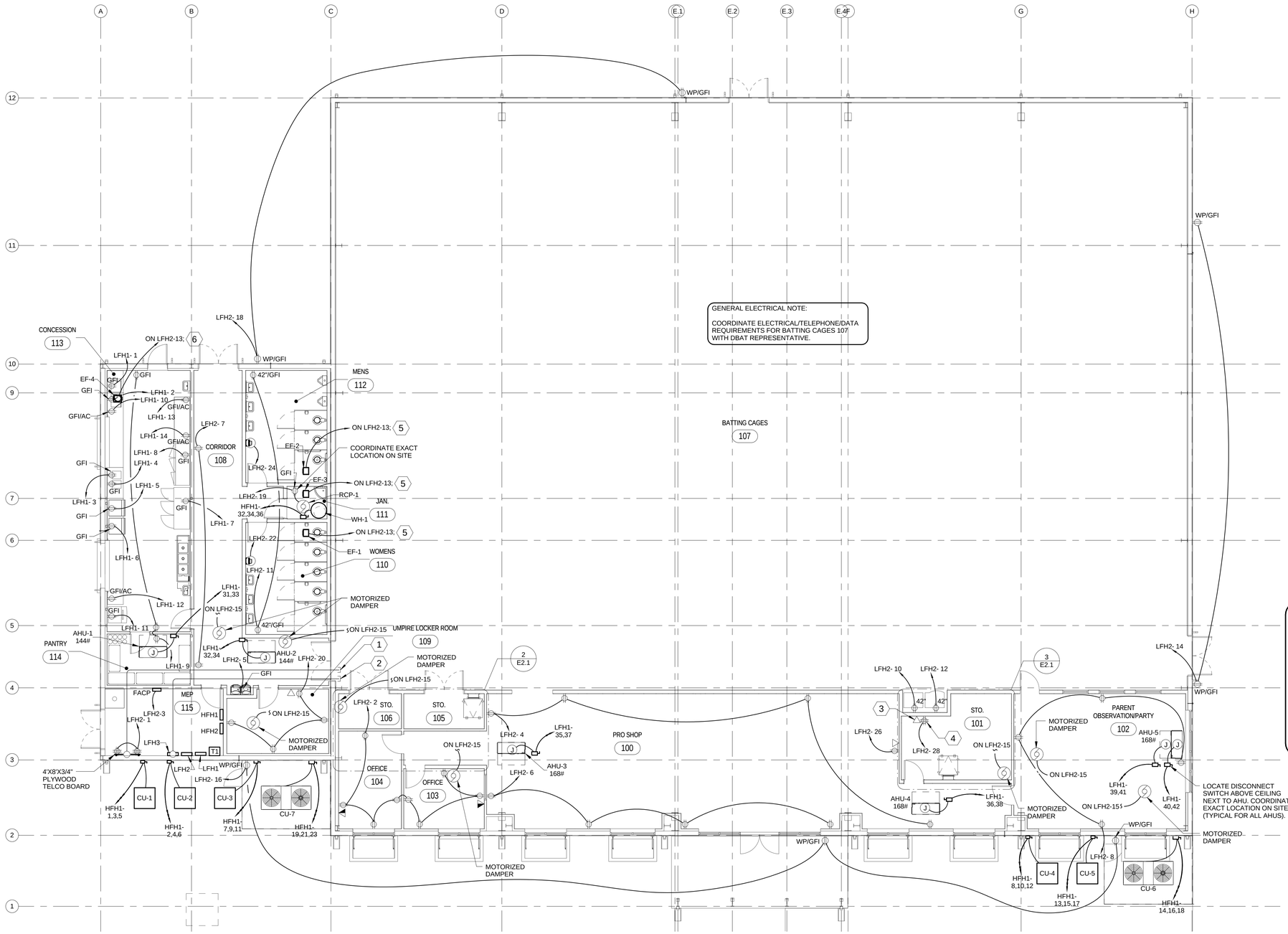

1 Power and Signal Plan

1/8" = 1'-0"

POWER AND SIGNAL PLAN KEYED NOTES ⟨ ⟩ : (1/E2.1 ONLY)

1. (1) 3"C WITH PULL WIRE ABOVE CEILING FROM TELEPHONE BOARD STUBBED OUT IN BATTING CAGES 107 FOR TELEPHONE/DATA CABLING.
2. (3) 1"C WITH PULL WIRE ABOVE CEILING FROM PANEL 'LFH3' STUBBED OUT IN BATTING CAGES 107 FOR BATTING CAGE POWER CIRCUITS, RECEPTACLES, ETC.
3. (4) DATA JACKS IN ONE WALL PLATE AT THIS LOCATION. COORDINATE EXACT REQUIREMENTS AND LOCATION WITH DBAT REPRESENTATIVE.
4. COORDINATE EXACT LOCATION AND REQUIREMENTS WITH DBAT REPRESENTATIVE.
5. EXHAUST FAN INTERLOCKED WITH ROOM LIGHT SWITCH. SEE E1.1.
6. EXHAUST FAN CONTROLLED WITH WALL SWITCH. SEE E1.1.

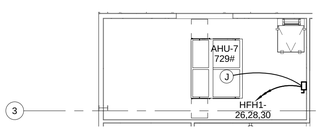

2 Mech. Mezz. (West) Power and Signal Plan

1/8" = 1'-0"

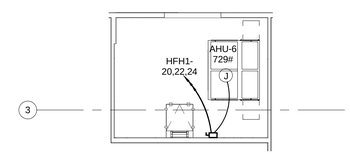

3 Mech. Mezz. (East) Power and Signal Plan

1/8" = 1'-0"

GENERAL TELEPHONE/DATA NOTES:

1. ELECTRICAL CONTRACTOR SHALL PROVIDE TELEPHONE AND DATA BOXES WILL PULL WIRE IN BATTING CAGES 107, PRO SHOP 100, AND OFFICE 103. DBAT SHALL PULL CABLING AND MAKE FINAL TERMINATIONS. COORDINATE ANY ADDITIONAL TELEPHONE AND DATA JACK LOCATIONS, QUANTITIES, AND REQUIREMENTS WITH DBAT REPRESENTATIVE.
2. TELEPHONE AND DATA JACKS FOR REMAINDER OF BUILDING SHALL BE PROVIDED BY ELECTRICAL CONTRACTOR.

REVISIONS

NO.	DESCRIPTION	DATE

PETER LEWIS ARCHITECT + ASSOCIATES
334 West Water Street Kerrville, TX 78028
(830) 896-4220 (830) 896-4226
www.pwlarchitect.com

City of Kerrville Athletic Complex Field House

Kerrville, Texas

NOT PUBLISHED. ALL RIGHTS RESERVED BY THE ARCHITECT. DRAWINGS AND SPECIFICATIONS AS INSTRUMENTS OF SERVICE ARE AND SHALL REMAIN THE PROPERTY OF THE ARCHITECT. THEY SHALL NOT BE USED ON OTHER PROJECTS OR EXTENSIONS TO THIS PROJECT EXCEPT BY AGREEMENT IN WRITING AND WITH APPROPRIATE COMPENSATION TO THE ARCHITECT. CONTRACTOR IS RESPONSIBLE FOR THE CONFIRMING AND CORRELATING DIMENSIONS AT JOB SITE. THE ARCHITECT WILL NOT BE RESPONSIBLE FOR CONSTRUCTION MEANS, METHODS, TECHNIQUES, SEQUENCES OR FOR SAFETY PRECAUTIONS AND PROGRAMS IN CONNECTION WITH THE PROJECT.

PROJECT NO.	DATE
20-1605	10/21/16

Power and Signal Plan

SHEET NUMBER

E2.1

STATE OF TEXAS
STEPHEN MITCHELL
99313
LICENSED PROFESSIONAL ENGINEER
10/21/16
3-31-17

ESA Mechanical & Electrical Engineering, Inc.
1100 NW Loop 410, Suite 810 210.342.3483
San Antonio, Texas 78213 F 210.342.3641
TBPE FIRM REGISTRATION NO. F-4137
JOB NO.: 16022

10/21/2016 2:56:48 PM

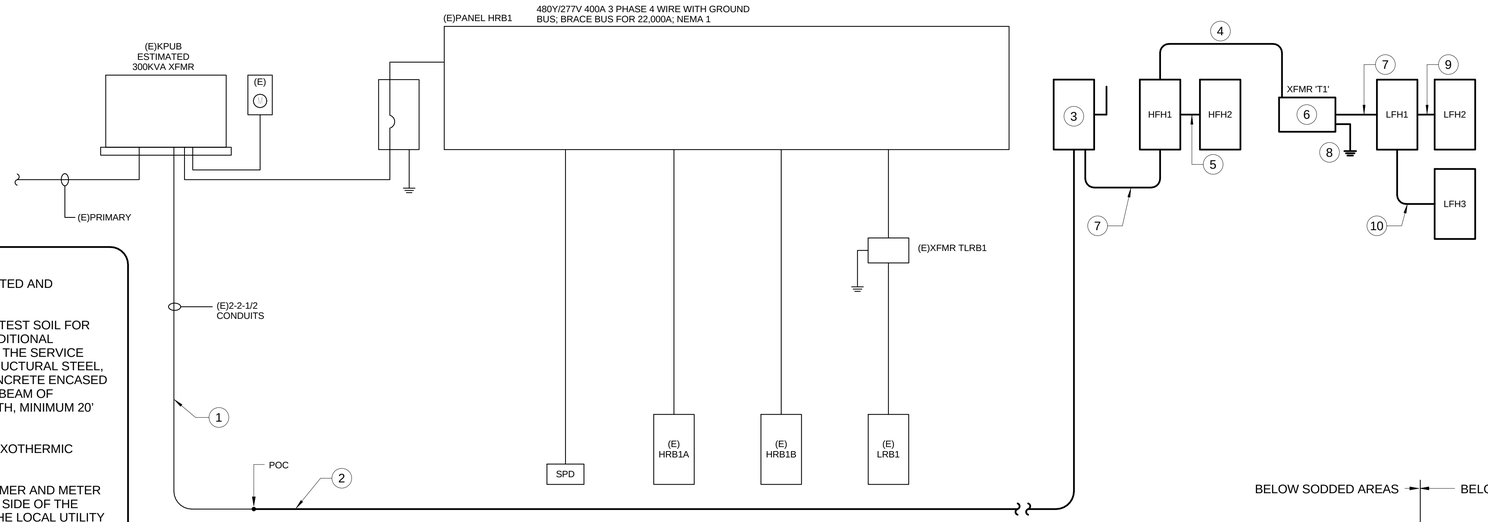

GENERAL RISER DIAGRAM NOTES:

1. MAIN SERVICE ENTRANCE GEAR SHALL BE LISTED AND LABELED AS SUCH.
2. GROUND RODS SHALL BE 3/4" X 10' MINIMUM. TEST SOIL FOR LESS THAN 25-OHM RESISTANCE AND ADD ADDITIONAL GROUND RODS AS REQUIRED. AT A MINIMUM, THE SERVICE GROUND SHALL BE BONDED TO BUILDING STRUCTURAL STEEL, DOMESTIC METAL COLD WATER PIPE AND CONCRETE ENCASED REBAR (UFER) LOCATED WITHIN FOOTING OR BEAM OF POURED SLAB IN DIRECT CONTACT WITH EARTH, MINIMUM 20' OF ½" REBAR OR #4 AWG.
3. CONNECTIONS TO GROUND RODS SHALL BE EXOTHERMIC WELD CONNECTIONS.
4. COORDINATE EXACT INSTRUMENT TRANSFORMER AND METER LOCATION AND DETERMINE THE CUSTOMER'S SIDE OF THE POINT OF SERVICE DELIVERY ON SITE WITH THE LOCAL UTILITY REPRESENTATIVE.
5. COORDINATE AVAILABLE FAULT CURRENT IN SUPPLY SOURCE WITH LOCAL UTILITY REPRESENTATIVE. INCREASE EQUIPMENT FAULT CURRENT RATING AS REQUIRED IF SPECIFIED RATING FOR THIS PROJECT IS FOUND TO BE INSUFFICIENT AND REPORT TO ENGINEER.

1 One-Line Diagram - Field House

N.T.S.

ELECTRICAL ONE-LINE DIAGRAM KEYED NOTES ◯ : (1/E3.1 ONLY)

1. PULL 2 SETS EACH OF (4#3/0, 1#4 GND) IN EXISTING 2-1/2" C.
2. 2 SETS EACH OF (4#3/0, 1#4 GND, 2-1/2"C).
3. 400A3PF400 NEMA 3R DISCONNECT SWITCH.
4. 3#2/0, 1#6 GND, 2"C.
5. 4#1/0, 1#6 GND, 2"C.
6. 112.5 KVA TRANSFORMER WITH 277/480V, 3Ø PRIMARY. 120/208V, 3Ø SECONDARY.
7. 2 SETS EACH OF (4#3/0, 1#4 GND, 2"C).
8. 1#1/0 GND BOND TO BUILDING STEEL AND COPPER COLD WATER PIPE. COMPLY WITH NEC SECTION 250.30
9. 4#4/0, 1#4 GND, 2-1/2"C.
10. 4#2, 1#8 GND, 1-1/4"C.

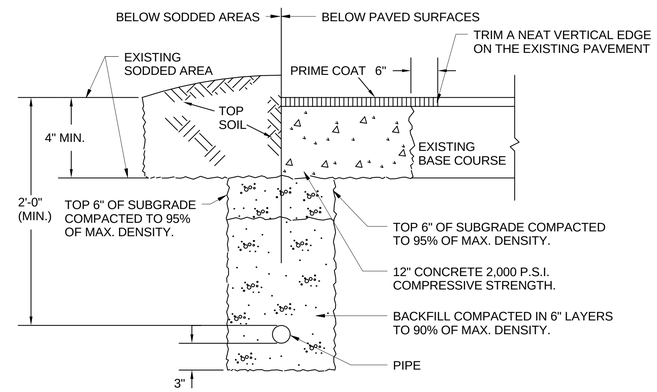

6 Trench Detail

N.T.S.

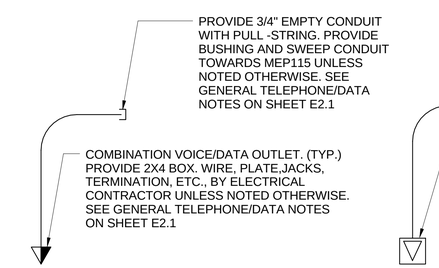

2 Data/Voice Outlet Detail

N.T.S.

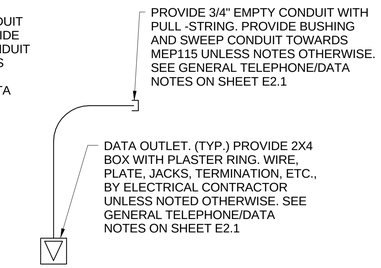

3 Data Outlet Detail

N.T.S.

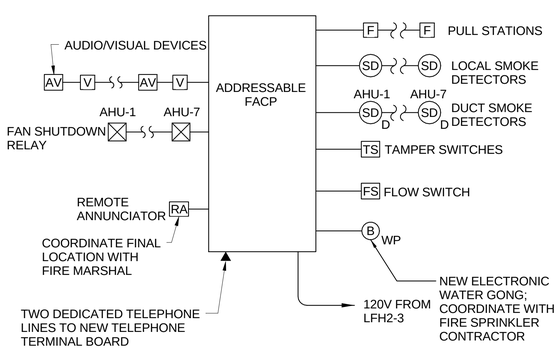

4 Fire Alarm Riser

N.T.S.

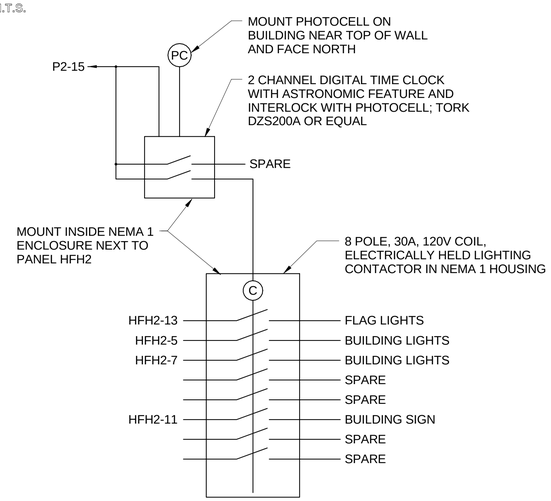

5 Exterior Lighting Controls

N.T.S.

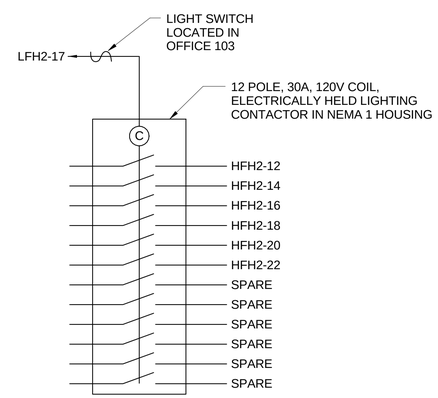

7 Ball Field Lighting Control

N.T.S.

REVISIONS

NO.	DESCRIPTION	DATE

PETER LEWIS ARCHITECT + ASSOCIATES
334 West Water Street Kerrville, TX 78028
(830) 896-4220 (830) 896-4226
www.pwlarchitect.com

CITY OF KERRVILLE 1889 TEXAS

City of Kerrville Athletic Complex Field House

Kerrville, Texas

NOT PUBLISHED. ALL RIGHTS RESERVED BY THE ARCHITECT. DRAWINGS AND SPECIFICATIONS AS INSTRUMENTS OF SERVICE ARE AND SHALL REMAIN THE PROPERTY OF THE ARCHITECT WHO PRESERVES THE RIGHTS TO THEIR PERPETUAL USE PERTAINING TO THIS PROJECT EXCEPT BY AGREEMENT IN WRITING AND WITH APPROPRIATE COMPENSATION TO THE ARCHITECT. CONTRACTOR IS RESPONSIBLE FOR THE CONFIRMING AND CORRELATING DIMENSIONS AT JOB SITE. THE ARCHITECT WILL NOT BE RESPONSIBLE FOR CONSTRUCTION MEANS, METHODS, TECHNIQUES, SEQUENCES OR FOR SAFETY PRECAUTIONS AND PROGRAMS IN CONNECTION WITH THE PROJECT.

PROJECT NO.	DATE
20-1605	10/21/16

STATE OF TEXAS
STEPHEN MITCHELL
99313
LICENSED PROFESSIONAL ENGINEER
3-31-17

ESA Mechanical & Electrical Engineering, Inc.
1100 NW Loop 410, Suite 810 210.342.3483
San Antonio, Texas 78213 F 210.342.3641
TBPE FIRM REGISTRATION NO. F-4137
JOB NO.: 16022

Electrical One-Line Diagram

SHEET NUMBER

E3.1

10/21/2016 2:56:50 PM

GENERAL ELECTRICAL NOTES:

1. THE WORD “PROVIDE” USED THROUGHOUT THESE CONTRACT DOCUMENTS SHALL MEAN “FURNISH AND INSTALL”.

2. ALL ELECTRICAL WORK SHALL CONFORM TO THE LATEST ADOPTED VERSIONS (INCLUDING LOCAL AMENDMENTS) OF THE NATIONAL ELECTRICAL CODE (NFPA 70), INTERNATIONAL FIRE CODES (IFC), NATIONAL LIFE SAFETY CODE (NFPA 101), NATIONAL FIRE ALARM CODE (NFPA 72), INTERNATIONAL ENERGY CONSERVATION CODE (IECC), INTERNATIONAL BUILDING CODES (IBC), AMERICANS WITH DISABILITIES ACT (ADA) AND LOCAL ACCESSIBILITY STANDARDS, NATIONAL ELECTRICAL MANUFACTURES ASSOCIATION (NEMA), AND STANDARD WORKMANSHIP PRACTICES.

3. IT SHALL BE THE RESPONSIBILITY OF THE ELECTRICAL CONTRACTOR TO INITIATE, MAINTAIN AND SUPERVISE ALL SAFETY PRECAUTIONS REQUIRED BY LOCAL, STATE AND FEDERAL LAWS, INCLUDING OSHA (OCCUPATIONAL SAFETY AND HEALTH ADMINISTRATION).

4. CONTRACTOR SHALL VISIT THE SITE AND ASCERTAIN THE CONDITIONS TO BE MET THERE IN INSTALLING HIS WORK AND MAKE DUE PROVISIONS FOR SAME IN HIS BID.

5. PROCURE ALL THE NECESSARY AND USUAL PERMITS AND CERTIFICATES FOR ALL WORK INSTALLED. DELIVER SAME TO THE OWNER BEFORE FINAL ACCEPTANCE. PAY ALL INSPECTION FEES NECESSARY.

6. THE DRAWINGS ARE DIAGRAMMATIC IN NATURE AND DO NOT SHOW EVERY MINOR DETAIL. THE ELECTRICAL CONTRACTOR SHALL PROVIDE ALL ITEMS REQUIRED FOR A COMPLETE ELECTRICAL SYSTEM.

7. ELECTRICAL CONTRACTOR SHALL INCLUDE TEMPORARY POWER, WIRING AND LIGHTING AS PART OF HIS SCOPE AS REQUIRED.

8. REFER TO MECHANICAL PLANS AND SPECIFICATIONS FOR ALL INTERLOCK WIRING REQUIREMENTS BETWEEN MOTORS AND CONTROLS. INCLUDE LABOR AND MATERIAL IN BID FOR ENERGIZING AND CONTROL OF MECHANICAL EQUIPMENT UNLESS OTHERWISE NOTED. USE #16 AWG OR LARGER FOR ALL CONTROL WIRING (90V OR LESS) UNLESS OTHERWISE NOTED.

9. ELECTRICAL GEAR SUCH AS SWITCHBOARDS, PANELBOARDS, TRANSFORMERS, DISCONNECTS, ETC. SHALL BE LABELED BY NAME OR BY EQUIPMENT SERVED WITH PERMANENTLY ATTACHED LABELS. SWITCHBOARDS AND PANELBOARDS SHALL HAVE A TYPED CIRCUIT DIRECTORY CARD PROTECTED BY A PLASTIC SLEEVE. LAMINATE CIRCUIT DIRECTORY CARDS FOR ALL NON-NEMA 1 EQUIPMENT.

10. IN GENERAL, ALL FLOOR MOUNTED ELECTRICAL GEAR SHALL SIT UPON A 3-1/2” HIGH MINIMUM CONCRETE HOUSEKEEPING PAD WITH 3” NOMINAL EQUIPMENT OVERHANG AND CHAMFERED EDGES.

11. SWITCHBOARDS AND PANELBOARDS MADE PART OF THIS PROJECT SHALL BE FIELD MARKED TO WARN QUALIFIED PERSONS OF POTENTIAL ARC FLASH HAZARD IN ACCORDANCE WITH NEC 110.16.

12. WHERE WORK ON ENERGIZED EQUIPMENT IS UNAVOIDABLE, MEASURES SHALL BE TAKEN TO ENSURE ONLY QUALIFIED ELECTRICIANS WEARING PERSONAL PROTECTIVE EQUIPMENT (PPE) RATED HIGHER THAN THE LISTED OR ANTICIPATED POTENTIAL ARC FLASH SHALL SERVICE/INSTALL THE EQUIPMENT.

13. DE-ENERGIZED EQUIPMENT SHALL FOLLOW ALL OSHA AND NFPA 70E LOCK OUT/TAG OUT PROCEDURES.

14. PARTS AND ELECTRIC EQUIPMENT THAT ARC OR SPARK IN NORMAL OPERATION SHALL BE ENCLOSED IN ACCORDANCE WITH NEC 110.18.

15. PROVIDE GROUND FAULT CIRCUIT INTERRUPTION (GFI) MEANS FOR RECEPTACLES LOCATED IN DAMP OR WET LOCATIONS, KITCHENS, TOILETS, BATHS, BASEMENTS, CRAWLSPACES, EXTERIOR, AND ANY OTHER LOCATION REQUIRED BY CODE. GENERAL PURPOSE RECEPTACLES DOWNSTREAM OF A GFI TYPE RECEPTACLE ON THE SAME BRANCH CIRCUIT SHALL BE CONSIDERED GFI PROTECTED AND SHALL BE LABELED AS SUCH.

16. FIRE SEAL ALL ELECTRICAL PENETRATIONS THROUGH FIRE RATED ASSEMBLIES AS REQUIRED. WERE APPLICABLE, FIRE SEAL ALL CONDUIT OPENINGS OF SURGE PROTECTION DEVICE (SPD) MOUNTED IN SEPARATE ENCLOSURES TO PROVIDE A PROTECTIVE BARRIER BETWEEN THE SPD COMPONENTS AND THE SPD OVERCURRENT PROTECTION DEVICE.

17. CABLES NOT INSTALLED WITHIN CONDUIT SHALL BE PLENUM RATED UNLESS OTHERWISE NOTED.

18. MINIMUM WIRE SIZE FOR LIGHTING AND RECEPTACLE BRANCH CIRCUITS SHALL BE #12 AWG. ALL CONDUCTORS SHALL BE COPPER THWN/THHN AND INSTALLED IN APPROVED RACEWAY. ALUMINUM OR COPPER-CLAD WIRING SHALL NOT BE USED. MINIMUM CONDUIT SIZE SHALL BE 1/2".

19. COORDINATE ALL CONDUIT AND J-BOX LOCATIONS AND ROUTES WITH OTHER TRADES, ESPECIALLY SPRINKLER LINES WHERE CEILING SPACE MAY BE LIMITED. ADDITIONAL WORK REQUIRED AS A RESULT OF FAILING TO COORDINATE WITH OTHER TRADES WILL BE PERFORMED AT NO ADDITIONAL COST TO THE OWNER OR A/E.

20. ALL MATERIALS SHALL BE NEW AND OF DOMESTIC ORIGIN AND SHALL BEAR UNDERWRITERS' LABEL WHERE APPLICABLE.

21. ALL WORK SHALL BE PERFORMED BY A LICENSED ELECTRICAL CONTRACTOR IN A FIRST-CLASS WORKMANLIKE MANNER. THE COMPLETED SYSTEM IS TO BE FULLY OPERABLE AND ACCEPTANCE OF THIS SYSTEM BY THE ENGINEER/ARCHITECT MUST BE A CONDITION OF THE SUB CONTRACT.

22. ALL WORK TO BE COORDINATED WITH OTHER TRADES TO AVOID INTERFERENCE WITH THE PROGRESS OF CONSTRUCTION.

23. CONTRACTOR TO GUARANTEE ALL MATERIALS AND WORKMANSHIP FREE FROM DEFECTS FOR A PERIOD OF NOT LESS THAN ONE (1) YEAR FROM DATE OF ACCEPTANCE.

24. CORRECTION OF ANY DEFECTS TO BE COMPLETED WITHOUT ADDITIONAL CHARGE AND TO INCLUDE REPLACEMENT OR REPAIR OF ANY OTHER PHASE OF THE INSTALLATION WHICH MAY HAVE BEEN DAMAGED THEREBY.

25. ALL REQUIRED INSURANCE TO BE PROVIDED FOR PROTECTION AGAINST PUBLIC LIABILITY OF PROPERTY DAMAGE FOR THE DURATION OF THE WORK.

26. CONTRACTOR TO PAY FOR ALL PERMITS, FEES, INSPECTIONS AND TESTING.

27. ELECTRICAL INSTALLATION TO MEET ALL STANDARD REQUIREMENTS OF LOCAL POWER AND TELEPHONE COMPANIES.

28. ALL UNDERGROUND RACEWAYS SHALL BE GALVANIZED RIGID STEEL CONDUIT OR SCHEDULE 40 PVC. ALL OTHER RACEWAYS TO COMPLY WITH GOVERNING CODES. MINIMUM CONDUIT UNDERGROUND SHALL BE 3/4" CONDUIT U.O.N.

29. OUTLET BOXES SHALL BE PRESSED STEEL IN DRY LOCATIONS, CAST ALLOY WITH THREADED HUBS IN WET OR DAMP LOCATIONS, AND BE OF SPECIAL CONSTRUCTION FOR OTHER CLASSIFIED AREAS. ALL BOXES SHALL BE RECESSED (FLUSH) IN WALLS OR CEILINGS WHENEVER POSSIBLE.

30. DISCONNECT SWITCHES SHALL BE H.P. RATED, GENERAL DUTY, QUICK-MAKE, QUICK-BREAK TYPE. ENCLOSURES SHALL BE AS REQUIRED BY N.E.C. AND LOCATION (WEATHERPROOF, EXPLOSION-PROOF, ETC.)

31. ALL RACEWAYS AND PIPES, SPACED IN OR THROUGH ANY CONCRETE SLAB, SHALL BE SPACED A MINIMUM OF THREE TIMES THE DIAMETER OF THE LARGEST RACEWAY.

32. ALL ELECTRICAL RACEWAYS (METALLIC AND NONMETALLIC) SHALL HAVE AN EQUIPMENT GROUND CONDUCTOR SIZED IN ACCORDANCE WITH THE LATEST EDITION OF THE N.E.C. OR AS SHOWN ON DRAWINGS, WHICHEVER IS MORE STRINGENT.

33. LOAD DATA IS BASED ON INFORMATION GIVEN ENGINEER AT THE TIME OF DESIGN. VERIFY ALL EQUIPMENT NAMEPLATE RATINGS BEFORE ORDERING.

34. CIRCUITS SHOWN ON PLANS ARE TO DETERMINE LOAD DATA AND PANEL SIZES. THE CONTRACTOR IS TO PROVIDE CIRCUITS AND ROUTING OF CONDUITS TO SUIT JOB CONDITIONS.

35. PROVIDE DISCONNECT SWITCHES, WIRING, AND CONNECTIONS ON AIR CONDITIONING SYSTEM AS SHOWN ON PLANS. ELECTRICAL CONTRACTOR SHALL VERIFY AND COORDINATE WITH MECHANICAL CONTRACTOR REGARDING SUPPLY AND INSTALLATION OF ALL REQUIRED CONTROLS.

36. ALL SWITCHGEAR SHALL BE THE PRODUCT OF A SINGLE MANUFACTURER. TANDEM AND HALF-SPACE CIRCUIT BREAKERS SHALL NOT BE USED.

37. ALL UNDERGROUND PVC CONDUIT RUNS SHALL HAVE RIGID STEEL ELBOWS AND RIGID STEEL SECTIONS AT SLAB PENETRATIONS. WHERE RIGID STEEL IS USED, IT SHALL BE COMPLETELY COATED WITH AN ALKALI AND RUST-RESISTANT BITUMASTIC PAINT, AND THREADS SHALL BE COATED WITH ZINC CHROMATE.

38. THE ELECTRICAL CONTRACTOR SHALL MEET AND COORDINATE WITH THE LOCAL UTILITY COMPANIES AT THE SITE PRIOR TO CONSTRUCTION. AT THAT TIME, THE CONTRACTOR SHALL COORDINATE ALL RELATED WORK WITH THE UTILITY COMPANIES' REPRESENTATIVES TO MEET THE OWNER'S SCHEDULE.

39. IT IS THE CONTRACTOR'S RESPONSIBILITY TO REVIEW ALL DRAWINGS AND SPECIFICATIONS, INCLUDING BUT NOT LIMITED TO, CIVIL, ELECTRICAL AND MECHANICAL PRIOR TO SUBMITTING A BID. REPORT ANY DISCREPANCIES TO OWNER OR ENGINEER PRIOR TO BID.

40. IT IS THE RESPONSIBILITY OF THE CONTRACTOR TO NOTIFY THE OWNER OF ANY DISCREPANCIES ENCOUNTERED ON THE PLANS OR IN EXISTING SITE CONDITIONS PRIOR TO SUBMISSION OF BID.

41. COORDINATE WITH OTHER TRADES FOR LOCATION OF ALL UNDER GROUND CONDUIT.

42. ALL 20-AMP, 120-VOLT RECEPTACLES WITHIN DEFINED KITCHEN SPACE SHALL BE PROTECTED BY GROUND FAULT CIRCUIT INTERRUPTING (GFI) MEANS.

43. PROVIDE STAINLESS STEEL (SS) COVER PLATES FOR ALL RECEPTACLES AND LIGHT SWITCHES.

44. PROVIDE ALL MATERIAL AND LABOR NECESSARY TO ENERGIZE AND CONTROL ALL MOTORIZED DAMPERS PROVIDED BY MECHANICAL CONTRACTOR. SEQUENCE CU/AHU SHUT DOWN PRIOR TO CLOSING DAMPER.

45. COORDINATE ELECTRICAL/TELEPHONE/DATA REQUIREMENTS FOR DBAT BATTING EQUIPMENT WITH DBAT REPRESENTATIVE.

46. RECEPTACLES INSTALLED IN PUBLIC AREAS SHALL BE TAMPER RESISTANT.

GENERAL LIGHTING NOTES:

1. MULTIPLE SWITCHES SHALL BE MOUNTED IN GANGS WITH A COMMON GANG DEVICE PLATE. PROVIDE BARRIERS BETWEEN DIFFERENT VOLTAGE SYSTEMS WHERE REQUIRED.

2. VERIFY ALL FIXTURE LED COLOR DESCRIPTIONS LISTED ON PLANS PRIOR TO RELEASING ORDER. IN GENERAL, LED INDOOR LIGHTING FIXTURES SHALL UTILIZE A COLOR TEMPERATURE OF 3500-KELVIN AND HAVE A MINIMUM COLOR RENDERING INDEX (CRI) OF 82, UNLESS OTHERWISE NOTED. LED OUTDOOR LIGHTING FIXTURES SHALL UTILIZE A COLOR TEMPERATURE OF 3000-KELVIN AND HAVE A MINIMUM COLOR RENDERING INDEX (CRI) OF 82, UNLESS OTHERWISE NOTED.

3. ALL OCCUPANCY SENSORS SHALL INCLUDE MANUAL ON/OFF CONTROL FUNCTION. SET TIMER FUNCTION TO “30 MINUTES”(MAX) PER IECC AND SENSITIVITY TO “50%” ON ALL MANUALLY ADJUSTABLE OCCUPANCY SENSOR DEVICES UNLESS OTHERWISE NOTED. OCCUPANCY SENSORS SHALL TURN OFF THE LIGHTS WITHIN 30 MINUTES OF OCCUPANT LEAVING THE SPACE.

4. PROVIDE APPROPRIATE CEILING FRAME AND/OR MOUNTING HARDWARE FOR EACH FIXTURE LISTED ON PLANS. ELECTRICAL CONTRACTOR SHALL WORK WITH SUPPLIERS TO VERIFY MOUNTING REQUIREMENTS WITH ACTUAL CEILING TYPES TO BE INSTALLED. LAY-IN FIXTURES MOUNTED IN HARD CEILINGS WITHOUT AN APPROPRIATE FRAME KIT WILL NOT BE ACCEPTED.

5. COORDINATE ALL FIXTURE LOCATIONS WITHIN MECHANICAL ROOMS WITH OTHER TRADES. MECHANICAL EQUIPMENT SHALL TAKE PRECEDENT.

REVISIONS

NO.	DESCRIPTION	DATE

PETER LEWIS
ARCHITECT + ASSOCIATES

334 West Water Street
Kerrville, TX 78028
(830) 896-4220
(830) 896-4226
www.pwlarchitect.com

City of Kerrville Athletic Complex Field House

Kerrville, Texas

NOT PUBLISHED: ALL RIGHTS RESERVED BY THE ARCHITECT. DRAWINGS AND SPECIFICATIONS AS INSTRUMENTS OF SERVICE ARE AND SHALL REMAIN THE PROPERTY OF THE ARCHITECT. THEY SHALL NOT BE USED ON OTHER PROJECTS OR EXTENSIONS TO THIS PROJECT, EXCEPT BY AGREEMENT IN WRITING AND APPROPRIATE COMPENSATION TO THE ARCHITECT. CONTRACTOR IS RESPONSIBLE FOR THE CONFIRMING AND CORRELATING DIMENSIONS AT JOB SITE, THE ARCHITECT WILL NOT BE RESPONSIBLE FOR CONSTRUCTION MEANS, METHODS, TECHNIQUES, SEQUENCES OR FOR SAFETY PRECAUTIONS AND PROGRAMS IN CONNECTION WITH THE PROJECT.

PROJECT NO. 20-1605

DATE 10/21/16

STATE OF TEXAS
STEPHEN MITCHELL
99313
LICENSED PROFESSIONAL ENGINEER
10/21/16
3-31-17

ESA Mechanical & Electrical Engineering, Inc.
1100 NW Loop 410, Suite 810
San Antonio, Texas 78213
210.342.3483
F 210.342.3641
TBPE FIRM REGISTRATION NO. F-4137

JOB NO. 16022

General Electrical Notes

SHEET NUMBER

E3.2

10/21/2016 2:56:51 PM

LIGHT FIXTURE SCHEDULE

MARK	FIXTURE DESCRIPTION	LIGHT SOURCE	LAMP MODEL	NO. LAMPS	WATTS	VOLTS	MOUNTING	MANUFACTURER	MODEL	NOTES
A	LED LENSED STRIP	LED LM79 & LM80 TESTED	5000Lm, 50kHr 3500K, +80 CRI	–	66.6	277	SURFACE	LITHONIA	ZL2N-L48-5000LM-MDD-MVOLT-35K-80CRI	4
B	2X4 LENSED TROFFER	LED LM79 & LM80 TESTED	4800Lm, 50kHr 3500K, +80 CRI	–	45	277	RECESSED	LITHONIA	2BLT4-48L-SDSMT-MVOLT-LP835	
C	2X4 LENSED TROFFER	LED LM79 & LM80 TESTED	7200Lm, 50kHr 3500K, +80 CRI	–	71	277	RECESSED	LITHONIA	2GTL-4-72L-MVOLT-LP835	
D	HIGH BAY FIXTURE	LED LM79 & LM80 TESTED	26400Lm, 50kHr 3500K, +80 CRI	–	150.2	277	STRUCTURE	LITHONIA	IBG-24000LM-SEF-GND-AFL-MVOLT-35K-80CRI	3
X1	EXIT SIGN SINGLE FACE	LED	GREEN	–	–	277	SURFACE	LITHONIA	LQM-S-W-3-G-120/277-EL N	
W1	EXTERIOR WALL PACK	LED LM79 & LM80 TESTED	4028Lm, 50kHr 3000K, +80 CRI	–	47	277	SURFACE	LITHONIA	WSQ-LED-2-10A700/30K-SR3-MVOLT-DDBXD	1, 2
F1	FLAG POLE FIXTURE	LED LM79 & LM80 TESTED	5775Lm, 100kHr 5000k,+70 CRI	–	74	277	AT GRADE	LITHONIA	DSXF2-4-A530/50K-MSP-MVOLT-THK-VG	2,5

LIGHT FIXTURE SCHEDULE GENERAL NOTES:

1. SUFFIX "E" INDICATES 1400 LUMEN BATTERY PACK. PROVIDE HOT LEAD TO INSURE LAMP IS CONTROLLED WITH WALL SWITCH.
2. PAY SPECIAL ATTENTION TO LAMP COLOR LISTED IN THE LIGHT FIXTURE SCHEDULE.
3. THE FIXTURE DESIGNATIONS ON THIS SCHEDULE ARE TYPICAL AND NOT INTENDED TO BE RESTRICTIVE BUT ARE INDICATIVE OF A PARTICULAR QUALITY AND CLASS OF FIXTURE UON.

LIGHT FIXTURE SCHEDULE NUMBERED NOTES:

1. WALL PACKS SHALL BE INSTALLED AT 13'-0" AFF ALONG BATTING CAGE WALLS AND 10'-0" AFF FOR CONCESSION/OFFICE/PRO SHOP WALLS.
2. COORDINATE FINISH COLOR WITH ARCHITECT.
3. BOTTOM OF FIXTURE INSTALLED AT 16'-0" AFF.
4. BOTTOM OF FIXTURE INSTALLED AT 12'-0" AFF IN BATTING CAGES.
5. PROVIDE ALL FITTINGS, ADAPTERS, ETC. TO INSTALL FIXTURE AS DIRECTED BY ARCHITECT.

PANEL: HFH1 — COMMENTS: A/C CIRCUITS
LOCATION: MEP 115
277/ 480 VOLTS, 3 PHASE, 4 WIRE — 400 AMP MAIN CIRCUIT BREAKER — 35 KAIC

CIRCUIT DATA NR	WIRE	GND	C	CKT NR	LOAD	CB POLE NR	CB TRIP A	CB LOAD VA	PHASE A	PHASE B	PHASE C	CB LOAD VA	CB TRIP A	CB POLE NR	LOAD	CKT NR	CIRCUIT DATA NR	WIRE	GND	C
3	12	12	1/2"	1	CU-1	3	15	1688	3376			1688	15	3	CU-2	2	3	12	12	1/2"
				3	30A3PNF NEMA 3R DISC. SWITCH	---	---	1688		3376		1688	---	---	30A3PNF NEMA 3R DISC. SWITCH	4				
				5		---	---	1688			3376	1688	---	---		6				
3	12	12	1/2"	7	CU-3	3	15	1937	3874			1937	15	3	CU-4	8	3	12	12	1/2"
				9	30A3PNF NEMA 3R DISC. SWITCH	---	---	1937		3874		1937	---	---	30A3PNF NEMA 3R DISC. SWITCH	10				
				11		---	---	1937			3874	1937	---	---		12				
3	12	12	1/2"	13	CU-5	3	15	2302	10657			8355	40	3	CU-6	14	3	8	10	3/4"
				15	30A3PNF NEMA 3R DISC. SWITCH	---	---	2302		10657		8355	---	---	60A3PNF NEMA 3R DISC. SWITCH	16				
				17		---	---	2302			10657	8355	---	---		18				
3	8	10	3/4"	19	CU-7	3	40	8355	16849			8494	40	3	AHU-6	20	3	8	10	3/4"
				21	60A3PNF NEMA 3R DISC. SWITCH	---	---	8355		16849		8494	---	---	60A3PNF NEMA 1 DISC. SWITCH	22				
				23		---	---	8355			16849	8494	---	---		24				
		SEE RISER		25	PANEL LFH1 VIA TRANSFORMER	3	175	29810	38304			8494	40	3	AHU-7	26	3	8	10	3/4"
				27		---	---	22171		30665		8494	---	---	60A3PNF NEMA 1 DISC. SWITCH	28				
				29		---	---	23247			31741	8494	---	---		30				
		SEE RISER		31	PANEL HFH2	3	150	13979	17939			4000	20	3	WATER HEATER WH-1	32	3	10	10	1/2"
				33		---	---	14735		18735		4000	---	---	30A3PNF NEMA 1 DISC. SWITCH	34				
				35		---	---	10601			14601	4000	---	---		36				
				37	SPACE				0						SPACE	38				
				39	SPACE					0					SPACE	40				
				41	SPACE						0				SPACE	42				

PANEL TYPE: NEMA 1
MOUNTING: FLUSH
FED FROM: SEE RISER

PHASE CONN.	91039	84156	81098	VA	0 % SPARE CAPACITY
TOTAL CONNECTED LOAD		256	KVA		95 % DEMAND FACTOR
CONNECTED + SPARE LOAD		256	KVA		309 AMPS CONNECTED
TOTAL DEMAND		243	KVA		
TOTAL DEMAND, AMPS		293	Amps AT	480 VOLTS	

1. COORDINATE EXACT CIRCUIT BREAKER, WIRE, AND CONDUIT SIZE WITH EQUIPMENT MANUFACTURER.

PANEL: HFH2 — COMMENTS: LIGHTING CIRCUITS
LOCATION: MEP 115
277/ 480 VOLTS, 3 PHASE, 4 WIRE — 250 AMP MAIN LUG ONLY — 35 KAIC

CIRCUIT DATA NR	WIRE	GND	C	CKT NR	LOAD	CB POLE NR	CB TRIP A	CB LOAD VA	PHASE A	PHASE B	PHASE C	CB LOAD VA	CB TRIP A	CB POLE NR	LOAD	CKT NR	CIRCUIT DATA NR	WIRE	GND	C
2	12	12	1/2"	1	LIGHTS-CONCESS/RR/JAN/CORR/PANTRY/UMPIRE	MECH	20	1555	3057			1502	20	1	LIGHTS-BATTING CAGES	2	2	12	12	1/2"
2	12	12	1/2"	3	LIGHTS-PRO SHOP/PARENT/STOR/OFFICES	1	20	2109		3912		1803	20	1	LIGHTS-BATTING CAGES	4	2	12	12	1/2"
2	12	12	1/2"	5	EXTERIOR WALL PACKS-FRONT	1	20	611			1513	902	20	1	LIGHTS-BATTING CAGES	6	2	12	12	1/2"
2	12	12	1/2"	7	EXTERIOR WALL PACKS-BATTING CAGES	1	20	235	2038			1803	20	1	LIGHTS-BATTING CAGES	8	2	12	12	1/2"
2	12	12	1/2"	9	LIGHTS-BATTING CAGES	1	20	1502		2235		733	20	1	LIGHTS-BATTING CAGE AISLES	10	2	12	12	1/2"
2	12	12	1/2"	11	EXTERIOR SIGN	1	20	500			4794	4294	20	3	BALL FIELD LIGHTS	12	3	10	12	1"
2	12	12	1/2"	13	FLAG POLE LIGHTS	1	20	296	4590			4294	---	---		14				
				15	SPARE	1	20			4294		4294	---	---		16				
				17	SPARE	1	20				4294	4294	20	3	BALL FIELD LIGHTS	18	3	10	12	1"
				19	SPARE	1	20		4294			4294	---	---		20				
				21	SPACE					4294		4294	---	---		22				
				23	SPACE						0		20	1	SPARE	24				
				25	SPACE				0				20	1	SPARE	26				
				27	SPACE					0					SPACE	28				
				29	SPACE						0				SPACE	30				
				31	SPACE				0						SPACE	32				
				33	SPACE					0					SPACE	34				
				35	SPACE						0				SPACE	36				
				37	SPACE				0						SPACE	38				
				39	SPACE					0					SPACE	40				
				41	SPACE						0				SPACE	42				

PANEL TYPE: NEMA 1
MOUNTING: FLUSH
FED FROM: SEE RISER

PHASE CONN.	13979	14735	10601	VA	0 % SPARE CAPACITY
TOTAL CONNECTED LOAD		39	KVA		95 % DEMAND FACTOR
CONNECTED + SPARE LOAD		39	KVA		47 AMPS CONNECTED
TOTAL DEMAND		37	KVA		
TOTAL DEMAND, AMPS		45	Amps AT	480 VOLTS	

1. CONTROL LIGHTS THROUGH TIMECLOCK.
2. LIGHT FIXTURES RELOCATED FROM SOCCER FIELD. COORDINATE EXACT CIRCUIT BREAKER REQUIREMENTS WITH LIGHT FIXTURE MANUFACTURER.

SEE NOTE BENEATH PANEL SCHEDULE (TYPICAL)

ELECTRICAL LEGEND

MARK	DESCRIPTION
	FLUORESCENT FIXTURE
	FLUORESCENT FIXTURE WITH BATTERY PACK
	FLUORESCENT STRIP FIXTURE
	WALL BRACKET FIXTURE
	INCANDESCENT FIXTURE
	EXIT LIGHT
	EMERGENCY LIGHT
	DUPLEX CONVENIENCE OUTLET
GFI GFI	OUTLET WITH GROUND FAULT CIRCUIT INTERRUPTER
IG	RECEPTACLE WITH ISOLATED GROUND
	FLOOR MOUNTED DUPLEX OUTLET
	240V OUTLET
	QUAD PLEX CONVENIENCE OUTLET
	WALL SWITCH
3	3-WAY SWITCH
PIR	PASSIVE INFRARED WALL SWITCH
	MOTOR
	CIRCUIT HOME-RUN TO PANEL
	SWITCH LEG
	DISCONNECT SWITCH
J J	JUNCTION BOX
T	TRANSFORMER
	PANEL
PC	PHOTO CELL
S	SPEAKER
XX	DENOTES ELECTRICAL KEYED NOTE
(E)	DENOTES EXISTING
FSD	FIRE SMOKE DAMPER
POC	POINT OF CONNECTION
M	MAGNETIC DOOR RELEASE

MOUNTING HEIGHTS

DEVICE	HEIGHT (PER ADA)
RECEPTACLES, DATA/TELEPHONE, TV	15"AFF TO BOTTOM OF DEVICE
SWITCHES, PULL STATIONS	48"AFF TO CENTER OF DEVICE
AUDIO VISUAL / VISUAL	80"AFF TO BOTTOM OF LENS OR 6" BELOW CEILING (WHICHEVER IS LOWER)
COUNTERTOP RECEPTACLES	MOUNTED VERTICALLY, 8" ABOVE COUNTER TO CENTER MOUNTED HORIZONTALLY, 6" ABOVE COUNTER TO CENTER

NOTE: ALL DEVICES SHALL BE MOUNTED AT THESE HEIGHTS UNLESS OTHERWISE NOTED.

REVISIONS

NO.	DESCRIPTION	DATE

PETER LEWIS ARCHITECT + ASSOCIATES
334 West Water Street, Kerrville, TX 78028
(830) 896-4220 (830) 896-4226
www.pwlarchitect.com

CITY OF KERRVILLE 1889 TEXAS

City of Kerrville Athletic Complex Field House

Kerrville, Texas

NOT PUBLISHED. ALL RIGHTS RESERVED BY THE ARCHITECT. DRAWINGS AND SPECIFICATIONS AS INSTRUMENTS OF SERVICE ARE AND SHALL REMAIN THE PROPERTY OF THE ARCHITECT. THEY SHALL NOT BE USED ON OTHER PROJECTS OR EXTENSIONS TO THIS PROJECT EXCEPT BY AGREEMENT IN WRITING AND WITH APPROPRIATE COMPENSATION TO THE ARCHITECT. CONTRACTOR IS RESPONSIBLE FOR THE CONFIRMING AND CORRELATING DIMENSIONS AT JOB SITE. THE ARCHITECT WILL NOT BE RESPONSIBLE FOR CONSTRUCTION MEANS, METHODS, TECHNIQUES, SEQUENCES OR FOR SAFETY PRECAUTIONS AND PROGRAMS IN CONNECTION WITH THE PROJECT.

PROJECT NO. 20-1605 DATE 10/21/16

Electrical Schedules

SHEET NUMBER E4.1

STATE OF TEXAS — STEPHEN MITCHELL — 99313 — LICENSED PROFESSIONAL ENGINEER — 10/21/16 — 3-31-17

ESA Mechanical & Electrical Engineering, Inc.
1100 NW Loop 410, Suite 810 San Antonio, Texas 78213
210.342.3483 F 210.342.3641
TBPE FIRM REGISTRATION NO. F-4137
JOB NO.: 16022

10/21/2016 2:56:52 PM

PANEL	LFH1	COMMENTS:	CONCESSION AND A/C CIRCUITS
LOCATION:	MEP 115		
120/ 208 VOLTS, 3 PHASE, 4 WIRE		400 AMP MAIN CIRCUIT BREAKER	30 KAIC

CIRCUIT DATA NR	WIRE	GND	C	CKT NR	LOAD	CB POLE NR	CB TRIP A	CB LOAD VA	PHASE A	PHASE B	PHASE C	CB LOAD VA	CB TRIP A	CB POLE NR	LOAD	CKT NR	CIRCUIT DATA NR	WIRE	GND	C	
2	12	12	1/2"	1	MICROWAVE	1	20	1500	3500			1500	20	1	MICROWAVE	2	2	12	12	1/2"	1
2	12	12	1/2"	3	HOT DOG STEAMER	1	20	800		1600		800	20	1	HOT DOG STEAMER	4	2	12	12	1/2"	1
2	12	12	1/2"	5	SODA DISPENSER	1	20	200			200	1200	20	1	SODA DISPENSER	6	2	12	12	1/2"	
2	12	12	1/2"	7	REFRIGERATOR	1	20	1020	2460			1440	20	1	FREEZER	8	2	12	12	1/2"	1,2
2	12	12	1/2"	9	RECEPT.-PANTRY/CONCESSION	1	20	540		720		180	20	1	COUNTER RECEPTACLE	10	2	12	12	1/2"	
2	10	10	1/2"	11	ICE MAKER	1	25	1956			2136	180	20	1	COUNTER RECEPTACLE	12	2	12	12	1/2"	1,2
2	12	12	1/2"	13	COUNTER RECEPTACLE	1	20	180	360			180	20	1	COUNTER RECEPTACLE	14	2	12	12	1/2"	
				15	SPARE	1	20			0			20	1	SPARE	16					
				17	SPARE	1	20				0		20	1	SPARE	18					
				19	SPARE	1	20		5222			5222	225	3	PANEL LFH2	20	SEE RISER				
				21	SPARE	1	20			4790		4790	---	---		22					
				23	SPARE	1	20				5090	5090	---	---		24					
3	12	12	1/2"	25	UNIT HEATER	1	15	1100	3500			2400	100	3	PANEL LFH3	26	SEE RISER				
				27	30A3PNF NEMA 1 DISC. SWITCH	---	---	1100		2300		1200	---	---		28					
				29		---	---	1100			1100	0	---	---		30					
2	8	10	3/4"	31	AHU-1	2	40	3327	6654			3327	40	2	AHU-2	32	2	8	10	3/4"	
				33	40A2PNF NEMA 1 DISC. SWITCH	---	---	3327		6654		3327	---	---	40A2PNF NEMA 1 DISC. SWITCH	34					
2	6	10	3/4"	35	AHU-3	2	40	4307			8614	4307	60	2	AHU-4	36	2	6	10	3/4"	
				37	40A2PNF NEMA 1 DISC. SWITCH	---	---	4307	8614			4307	---	---	40A2PNF NEMA 1 DISC. SWITCH	38					
2	6	10	3/4"	39	AHU-5 CIRCUIT 1	2	60	4307		6107		1800	25	2	AHU-5 CIRCUIT2	40	2	10	10	1/2"	
				41	30A2PNF NEMA 1 DISC. SWITCH	---	---	4307			6107	1800	---	---	30A2PNF NEMA 1 DISC. SWITCH	42					

PANEL TYPE :	NEMA 1	PHASE CONN.	29810	22171	23247	VA
MOUNTING:	FLUSH	TOTAL CONNECTED LOAD		75	KVA	
FED FROM:	HFH1 VIA XFMR	CONNECTED + SPARE LOAD		75	KVA	
		TOTAL DEMAND		71	KVA	
		TOTAL DEMAND, AMPS		199	Amps	AT 208 VOLTS

0	% SPARE CAPACITY
95	% DEMAND FACTOR
209	AMPS CONNECTED

1. COORDINATE RECEPTACLE TYPE, WIRE SIZE, CIRCUIT BREAKER SIZE, AND CONDUIT SIZE WITH EQUIPMENT MANUFACTURER.
2. PROVIDE HACR BREAKER.

PANEL	LFH2	COMMENTS:	GENERAL POWER CIRCUITS
LOCATION:	MEP 115		
120/ 208 VOLTS, 3 PHASE, 4 WIRE		225 AMP MAIN CIRCUIT BREAKER	30 KAIC

CIRCUIT DATA NR	WIRE	GND	C	CKT NR	LOAD	CB POLE NR	CB TRIP A	CB LOAD VA	PHASE A	PHASE B	PHASE C	CB LOAD VA	CB TRIP A	CB POLE NR	LOAD	CKT NR	CIRCUIT DATA NR	WIRE	GND	C
2	12	12	1/2"	1	TELCO BOARD	1	20	720	2160			1440	20	1	RECEPT.-STO 106/OFF 104/OFF 103	2	2	12	12	1/2"
2	12	12	1/2"	3	FIRE ALARM PANEL	1	20	100		820		720	20	1	RECEPT.-PRO SHOP	4	2	12	12	1/2"
2	12	12	1/2"	5	DRINKING FOUNTAIN	1	20	500			1220	720	20	1	RECEPT.-PRO SHOP	6	2	12	12	1/2"
2	12	12	1/2"	7	CORRIDOR RECEPTACLES	1	20	360	1080			720	20	1	RECEPT.-PARENT OBSERVATION	8	2	12	12	1/2"
				9	SPARE	1	20			750		750	20	1	VENDING MACHINE	10	2	12	12	1/2"
2	12	12	1/2"	11	RESTROOM GFI RECEPTACLES	1	20	360			1110	750	20	1	VENDING MACHINE	12	2	12	12	1/2"
2	12	12	1/2"	13	CONCESSION, RR, JANITOR EXH. FANS	1	20	642	1002			360	20	1	EXTERIOR RECEPTACLES	14	2	12	12	1/2"
2	12	12	1/2"	15	MOTORIZED DAMPERS	1	20	200		740		540	20	1	EXTERIOR RECEPTACLES	16	2	12	12	1/2"
2	12	12	1/2"	17	BALL FIELD LIGHTING CONTACTOR	1	20	100			460	360	20	1	EXTERIOR RECEPTACLES	18	2	12	12	1/2"
2	12	12	1/2"	19	RECIRCULATIN PUMP RCP-1	1	20	100	820			720	20	1	RECEPT.-UMPIRE LOCKER RM.	20	2	12	12	1/2"
2	12	12	1"	21	FUTURE SCOREBOARD	1	20	500		2800		2300	25	1	WOMEN'S RR HAND DRYER	22	2	10	12	1/2"
				23	SPARE	1	20				2300	2300	25	1	MEN'S RR HAND DRYER	24	2	10	12	1/2"
				25	SPARE	1	20		360			360	20	1	RECEPT.-PRO SHOP COMPUTER	26	2	12	12	1/2"
				27	SPARE	1	20			180		180	20	1	RECEPT.-STORAGE 101	28	2	12	12	1/2"
				29	SPARE	1	20				0				SPACE	30				
				31	SPACE				0						SPACE	32				
				33	SPACE					0					SPACE	34				
				35	SPACE						0				SPACE	36				
				37	SPACE				0						SPACE	38				
				39	SPACE					0					SPACE	40				
				41	SPACE						0				SPACE	42				

PANEL TYPE :	NEMA 1	PHASE CONN.	5422	5290	5090	VA
MOUNTING:	FLUSH	TOTAL CONNECTED LOAD		16	KVA	
FED FROM:	LFH1	CONNECTED + SPARE LOAD		16	KVA	
		TOTAL DEMAND		15	KVA	
		TOTAL DEMAND, AMPS		42	Amps	AT 208 VOLTS

0	% SPARE CAPACITY
95	% DEMAND FACTOR
44	AMPS CONNECTED

1. COORDINATE EXACT CIRCUIT BREAKER AND WIRE SIZE WITH EQUIPMENT MANUFACTURER.

PANEL	LFH3	COMMENTS:	DBAT CIRCUITS
LOCATION:	MEP 115		
120/ 208 VOLTS, 3 PHASE, 4 WIRE		100 AMP MAIN CIRCUIT BREAKER	30 KAIC

CIRCUIT DATA NR	WIRE	GND	C	CKT NR	LOAD	CB POLE NR	CB TRIP A	CB LOAD VA	PHASE A	PHASE B	PHASE C	CB LOAD VA	CB TRIP A	CB POLE NR	LOAD	CKT NR	CIRCUIT DATA NR	WIRE	GND	C
				1	SPARE (FUTURE PITCHING MACHINE)	1	20	1205	2405			1205	20	1	SPARE (FUTURE PITCHING MACHINE)	2				
				3	SPARE (FUTURE PITCHING MACHINE)	1	20	1200		1200			20	1	SPARE	4				
				5	SPARE	1	20				0		20	1	SPARE	6				
				7	SPARE	1	20		0				20	1	SPARE	8				
				9	SPARE	1	20			0			20	1	SPARE	10				
				11	SPARE	1	20				0		20	1	SPARE	12				
				13	SPARE	1	20		0				20	1	SPARE	14				
				15	SPARE	1	20			0			20	1	SPARE	16				
				17	SPARE	1	20				0		20	1	SPARE	18				
				19	SPARE	1	20		0				20	1	SPARE	20				
				21	SPARE	1	20			0			20	1	SPARE	22				
				23	SPARE	1	20				0		20	1	SPARE	24				
				25	SPACE				0						SPACE	26				
				27	SPACE					0					SPACE	28				
				29	SPACE						0				SPACE	30				
				31	SPACE				0						SPACE	32				
				33	SPACE					0					SPACE	34				
				35	SPACE						0				SPACE	36				
				37	SPACE				0						SPACE	38				
				39	SPACE					0					SPACE	40				
				41	SPACE						0				SPACE	42				

PANEL TYPE :	NEMA 1	PHASE CONN.	2400	1200	0	VA
MOUNTING:	FLUSH	TOTAL CONNECTED LOAD		4	KVA	
FED FROM:	LFH1	CONNECTED + SPARE LOAD		4	KVA	
		TOTAL DEMAND		3	KVA	
		TOTAL DEMAND, AMPS		10	Amps	AT 208 VOLTS

0	% SPARE CAPACITY
95	% DEMAND FACTOR
10	AMPS CONNECTED

LOAD ANALYSIS
PROJECT: City of Kerrville Athletic Complex Field House
AREA (SF): 17,714 VOLTS: 480 THREE PHASE

LOAD DESCRIPTION: STORE	CONNECTED KVA	DIVERSITY	DEMAND KVA
LIGHTING AND SIGNS:	39	1.25	49
RECEPTACLES:	9	1.0/0.5	9
A/C-49 TONS (NON-COINCIDENT LOAD; HEATING IS LARGER):	N/A	N/A	N/A
WATER HEATING	12	1.00	12
SPACE HEATING:	164	1.00	164
MISCELLANOUS MOTORS (PLUS 25% OF LARGEST MOTOR)	9	1.00	9
REFRIGERATION EQUIP.	6	0.80	5
KITCHEN EQUIP.	2	0.65	1
TOTAL KVA:			250
TOTAL AMPS:			301
SERVICE ENTRANCE SIZE, AMPS:			400

SEE NOTE BENEATH PANEL SCHEDULE (TYPICAL)

REVISIONS

NO.	DESCRIPTION	DATE

PETER LEWIS
ARCHITECT + ASSOCIATES
334 West Water Street Kerrville, TX 78028
(830) 896-4220 (830) 896-4226
www.pwlarchitect.com

City of Kerrville Athletic Complex Field House

Kerrville, Texas

NOT PUBLISHED. ALL RIGHTS RESERVED BY THE ARCHITECT. DRAWINGS AND SPECIFICATIONS AS INSTRUMENTS OF SERVICE ARE AND SHALL REMAIN THE PROPERTY OF THE ARCHITECT. THEY SHALL NOT BE USED ON OTHER PROJECTS OR EXTENSIONS TO THIS PROJECT EXCEPT BY AGREEMENT IN WRITING AND WITH APPROPRIATE COMPENSATION TO THE ARCHITECT. CONTRACTOR IS RESPONSIBLE FOR THE CONFIRMING AND CORRELATING DIMENSIONS AT JOB SITE. THE ARCHITECT WILL NOT BE RESPONSIBLE FOR CONSTRUCTION MEANS, METHODS, TECHNIQUES, SEQUENCES OR FOR SAFETY PRECAUTIONS AND PROGRAMS IN CONNECTION WITH THE PROJECT.

PROJECT NO. 20-1605 DATE 10/21/16

Electrical Schedules

SHEET NUMBER

E4.2

STATE OF TEXAS
STEPHEN MITCHELL
99313
LICENSED PROFESSIONAL ENGINEER
10/21/16
3-31-17

ESA Mechanical & Electrical Engineering, Inc.
1100 NW Loop 410, Suite 810 210.342.3483
San Antonio, Texas 78213 F 210.342.3641
TBPE FIRM REGISTRATION NO. F-4137
JOB NO.: 16022

10/21/2016 2:56:53 PM

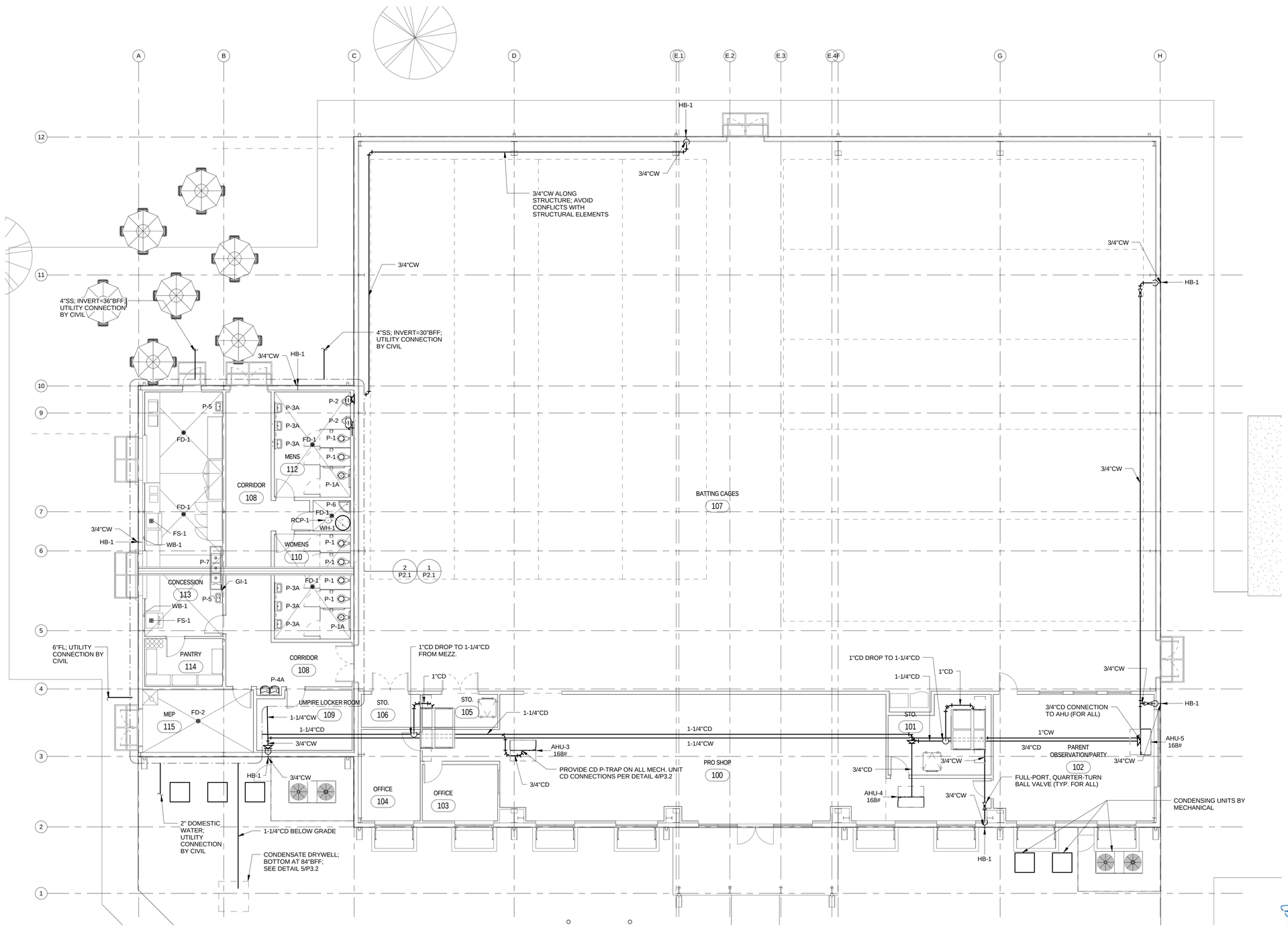

1 Plumbing Plan

1/8" = 1'-0"

REVISIONS

NO.	DESCRIPTION	DATE

PETER LEWIS
ARCHITECT + ASSOCIATES

334 West Water Street
(830) 896-4220

Kerrville, TX 78028
(830) 896-4226

www.pwlarchitect.com

City of Kerrville Athletic Complex Field House

Kerrville, Texas

NOT PUBLISHED. ALL RIGHTS RESERVED BY THE ARCHITECT. DRAWINGS AND SPECIFICATIONS AS INSTRUMENTS OF SERVICE ARE AND SHALL REMAIN THE PROPERTY OF THE ARCHITECT. THEY SHALL NOT BE USED ON OTHER PROJECTS OR EXTENSIONS TO THIS PROJECT EXCEPT BY AGREEMENT IN WRITING AND WITH APPROPRIATE COMPENSATION TO THE ARCHITECT. THE CONTRACTOR SHALL VERIFY AND BE RESPONSIBLE FOR CONFIRMING AND CORRELATING DIMENSIONS AT JOB SITE. THE ARCHITECT WILL NOT BE RESPONSIBLE FOR CONSTRUCTION MEANS, METHODS, TECHNIQUES, SEQUENCES OR FOR SAFETY PRECAUTIONS AND PROGRAMS IN CONNECTION WITH THE PROJECT.

PROJECT NO. 20-1605

DATE 10/21/16

Plumbing Plan

SHEET NUMBER

P1.1

STATE OF TEXAS
BRUCE CECIL SMITH
68595
REGISTERED PROFESSIONAL ENGINEER
8-30-17

10/21/16

ESA Mechanical & Electrical Engineering, Inc.

1100 NW Loop 410, Suite 810
San Antonio, Texas 78213

210.342.3483
F 210.342.3641

TBPE FIRM REGISTRATION NO. F-4137

JOB NO.: 16022

10/21/2016 2:57:54 PM

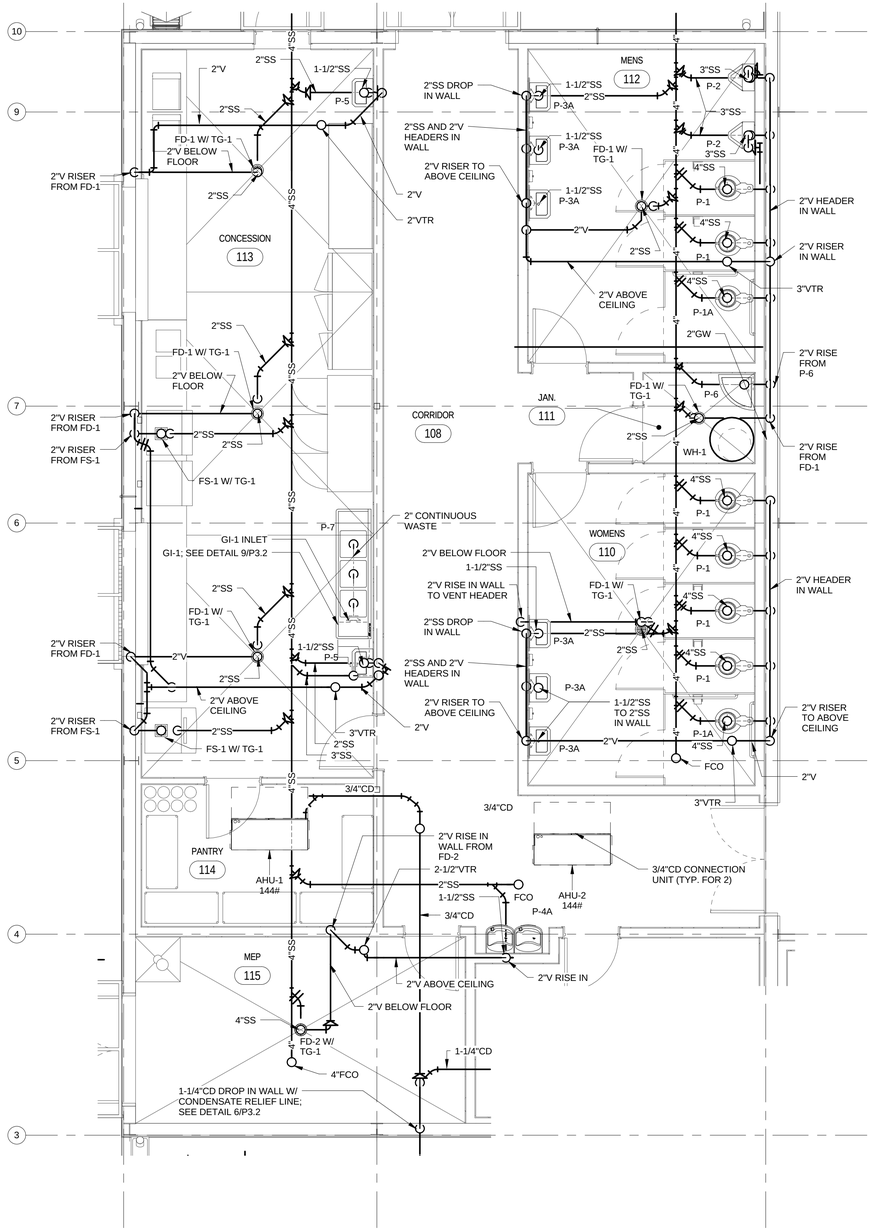

1 Enlarged Plumbing Plan - Waste & Vent

1/4" = 1'-0"

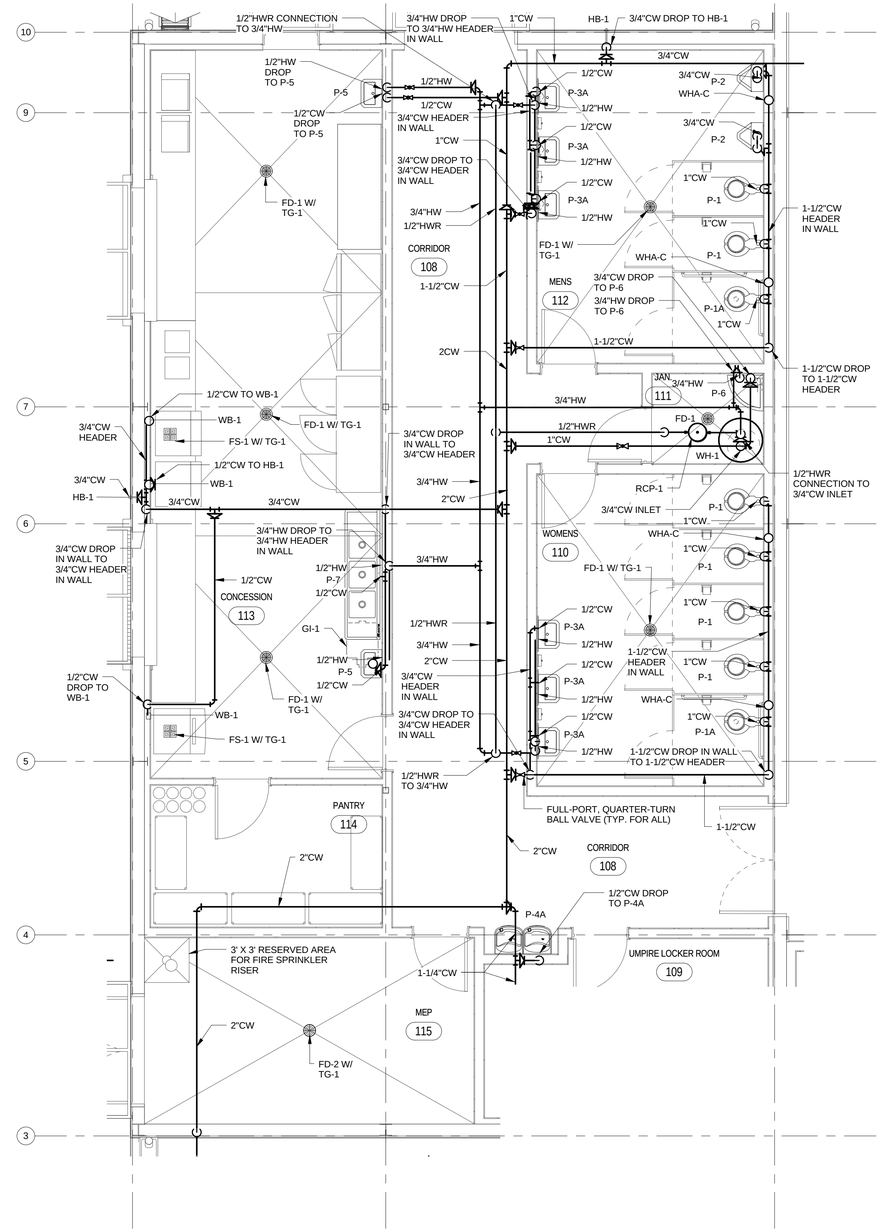

2 Enlarged Plumbing Plan - Domestic Water

1/4" = 1'-0"

REVISIONS

NO.	DESCRIPTION	DATE

PETER LEWIS
ARCHITECT + ASSOCIATES

334 West Water Street
Kerrville, TX 78028
(830) 896-4220
(830) 896-4226
www.pwlarchitect.com

City of Kerrville Athletic Complex Field House

Kerrville, Texas

NOT PUBLISHED. ALL RIGHTS RESERVED BY THE ARCHITECT. DRAWINGS AND SPECIFICATIONS AS INSTRUMENTS OF SERVICE ARE AND SHALL REMAIN THE PROPERTY OF THE ARCHITECT. THE REPRODUCTION, PUBLICATION OR USE OF THESE DRAWINGS TO THIS PROJECT, EXCEPT BY AGREEMENT IN WRITING AND WITH APPROPRIATE COMPENSATION TO THE ARCHITECT. CONTRACTOR IS RESPONSIBLE FOR THE CONFIRMING AND CORRELATING DIMENSIONS AT JOB SITE. THE ARCHITECT WILL NOT BE RESPONSIBLE FOR CONSTRUCTION MEANS, METHODS, TECHNIQUES, SEQUENCES OR FOR SAFETY PRECAUTIONS AND PROGRAMS IN CONNECTION WITH THE PROJECT.

PROJECT NO.	DATE
20-1605	10/21/16

Enlarged Plumbing Plans

SHEET NUMBER

P2.1

STATE OF TEXAS
BRUCE CECIL SMITH
68595
REGISTERED PROFESSIONAL ENGINEER
6-30-17
10/21/16

ESA Mechanical & Electrical Engineering, Inc.
1100 NW Loop 410, Suite 810
San Antonio, Texas 78213
210.342.3483
F 210.342.3641
TBPE FIRM REGISTRATION NO. F-4137
JOB NO.: 16022

10/21/2016 2:57:58 PM

GENERAL PLUMBING NOTES:

1. ALL PLUMBING INSTALLATIONS TO BE MADE IN ACCORDANCE WITH LATEST LOCAL ADOPTED CODES AND CURRENT A.D.A. CRITERIA.
2. WASTE AND VENT LINES TO BE SCHEDULE 40 PVC.
3. COPPER LINES IN CONCRETE TO BE PROTECTED WITH PLASTIC JACKET.
4. ALL WATER LINES IN BUILDING SHALL BE RUN ABOVE CEILING UNLESS NOTED OTHERWISE.
5. SLOPE ALL SANITARY SEWER WASTE LINES AT 1/4" PER FOOT.
6. INSULATE ALL HOT WATER LINES (INCLUDING LINES RUN ABOVE CEILING) WITH 1" OWENS-CORNING FIBERGLASS ASJ/SSL-11 OR EQUIVALENT.
7. FIRE-SEAL ALL PIPE PENETRATIONS THRU FIRE-RATED WALLS.
8. PLUMBING LINES SHALL NOT BE INSTALLED ABOVE ELECTRICAL PANELS. COORDINATE PANEL LOCATIONS WITH ELECTRICAL CONTRACTOR.
9. PROVIDE LOCAL CODE APPROVED BACKFLOW PREVENTERS CONFORMING TO ASSE 1022 FOR ALL BEVERAGE DISPENSERS AND WATER DISPENSING FOOD SERVICE EQUIPMENT. FOR ALL CARBONATED BEVERAGE DISPENSERS, PROVIDE LOCAL CODE APPROVED STAINLESS STEEL BACKFLOW PREVENTERS CONFORMING TO ASSE 1022.
10. ALL POTABLE WATER PIPING SHALL BE COPPER. ALL COPPER LINES IN SLAB TO BE TYPE "K" SOFT COPPER WITH NO JOINTS. COPPER LINES NOT INSTALLED IN SLAB TO BE TYPE 'L' HARD COPPER.
11. PROVIDE ALTERNATE BID WITH ALL POTABLE WATER LINES TO BE PEX. PIPE SIZE INDICATED ON THESE DRAWINGS ARE SIZED PER COPPER AND SHALL BE ADJUSTED AS REQUIRED FOR PEX. APPROVED PEX MANUFACTURERS: AQUATHERM GREENPIPE, UPINOR WIRSBO AND REHAU. PEX PIPING MUST BE APPLICABLE FOR HOT WATER RECIRCULATION SYSTEM.
12. COORDINATE ROUGH-IN HEIGHTS, FIXTURE MOUNTING HEIGHTS, AND ADA CLEARANCES WITH VENDOR EQUIPMENT DRAWINGS, ARCHITECT, AND TEXAS ADA ACCESSIBILITY STANDARDS.
13. ALL PIPING BELOW GRADE SHALL HAVE NO JOINTS BELOW GRADE.
14. ALL WATER HAMMER ARRESTORS TO BE SIOUX CHIEF PISTON TYPE OR EQUAL. PROVIDE ACCESS PANELS WHERE REQUIRED.
15. ALL CONDENSATE DRAIN LINES SHALL SLOPE AT 1/8" PER FOOT.
16. ALL INTERIOR CONDENSATE PIPING SHALL BE INSULATED SCHEDULE 40 PVC.
17. ALL EXTERIOR CONDENSATE PIPING SHALL BE TYPE "L" HARD COPPER.
18. DO NOT INSTALL WATER LINES OR VENT LINES ABOVE ELECTRICAL PANELBOARDS. COORDINATE PANELBOARD LOCATIONS WITH ELECTRICAL CONTRACTOR.
19. ALL PLUMBING SHALL COMPLY WITH THE MOST STRINGENT OF APPLICABLE CODES, ORDINANCES, OR SPECIFICATIONS.
20. ALL FIXTURES SHALL BE PROPERLY VENTED TO THE ATMOSPHERE.
21. REFER TO MECHANICAL SHEETS FOR LOCATIONS OF MECHANICAL EQUIPMENT AND DUCTWORK AND CORRELATE ALL WORK TO FIT AVAILABLE SPACE.
22. WATER PIPING AND VENT PIPING MAINS SHALL BE INSTALLED ABOVE LAY-IN CEILING UNLESS OTHERWISE NOTED.
23. FOR INDIVIDUAL LINE SIZES TO FIXTURES SEE PLUMBING FIXTURE SCHEDULE.
24. DO NOT RUN PLUMBING IN SHEAR WALLS.
25. REFER TO ARCHITECTURAL DRAWINGS FOR ADA MOUNTING HEIGHTS.
26. PROVIDE WATER HAMMER ARRESTORS FOR DISHWASHER AND KITCHEN SINKS PER CITY OF SAN ANTONIO CHAPTER 24 PLUMBING CODE SECTION 604.9. INSTALL WATER HAMMER ARRESTORS ABOVE CEILING ON HOT AND COLD WATER LINES.
27. SEAL AROUND PIPE PENETRATIONS WHERE PIPE PASSES BETWEEN LOCATIONS WITH DIFFERENCES IN TEMPERATURE, SUCH AS REFRIGERATED SPACES.
28. VENT LINES SHALL BE INSTALLED ABOVE CEILING OR A MINIMUM OF 6" ABOVE THE FLOOD RIM OF THE FIXTURE SERVED. VENT LINES SHOWN IN SLAB CONNECT TO TRAPS OF FLOOR DRAINS AND FLOOR SINKS. ENSURE VENT PIPING IS INSTALLED WITH A SLOPE OF 1/8" RISE PER FOOT TOWARDS VENT RISER IN NEAREST WALL.
29. EVERY DRY VENT SHALL RISE VERTICALLY TO A MINIMUM OF 6" ABOVE THE FLOOD LEVEL RIM OF THE HIGHEST TRAP OR TRAPPED FIXTURE BEING VENTED. WHEN STRUCTURAL CONDITIONS REQUIRE HORIZONTAL VENTS TO BE INSTALLED BELOW THE FLOOD LEVEL RIM OF THE FIXTURE THEY SERVE, THEY SHALL HAVE A CLEANOUT INSTALLED ON THE RISER IN AN ACCESSIBLE LOCATION.
30. A CONNECTION BETWEEN A VENT PIPE AND A VENT STACK OR STACK VENT SHALL BE MADE AT LEAST 6" ABOVE THE FLOOD LEVEL RIM OF THE HIGHEST FIXTURE SERVED BY THE VENT. HORIZONTAL VENT PIPES FORMING BRANCH VENTS, RELIEF VENTS OR LOOP VENTS SHALL BE AT LEAST 6"ABOVE THE FLOOD LEVEL RIM OF THE HIGHEST FIXTURE SERVED.

PLUMBING FIXTURE SCHEDULE

MARK	ITEM	HW	CW	DRAIN	VENT	REMARKS
P-1	WATER CLOSET - FLOOR MOUNT FLUSH VALVE	-	1"	4"	2"	AMERICAN STANDARD 2234.015 "MADERA" FLOWISE 14" HEIGHT & SLOAN REGAL 111-XL 1.6 GPF FLUSHOMETER & CHURCH 9500SSC OPEN FRONT SEAT LESS COVER (1)
P-1A	WATER CLOSET - FLOOR MOUNT FLUSH VALVE (ADA)	-	1"	4"	2"	AMERICAN STANDARD 3043.102 "MADERA" FLOWISE 17" HEIGHT & SLOAN REGAL 111-XL 1.6 GPF FLUSHOMETER & CHURCH 9500SSC OPEN FRONT SEAT LESS COVER (1)
P-2A, P-2	URINAL (P-2A : ADA)	-	3/4"	2"	1-1/2"	AMERICAN STANDARD 6541.132 "ALLBROOK" FLOWISE 0.5 GPF HIGH EFFICIENCY URINAL VITREOUS CHINA (WHITE), 3/4" TOP SPUD; SLOAN 186-XL-0.5 "REGAL" (0.5GPF) FLUSH VALVE; PROVIDE IN-WALL FLOOR MOUNTED CARRIER; (17" TO RIM) (4) (5)
P-3A	WALL MOUNTED LAVATORY (ADA)	1/2"	1/2"	2"	1-1/4"	AMERICAN STANDARD 0355.012 "LUCERNE" WALL MOUNTED SINK, 4-IN. CTRS, VITREOUS CHINA, 20-1/2"X19-1/4" (WHITE); CHICAGO 802-V LEVER HANDLES LAVATORY FAUCET LESS POP-UP, PROVIDE 0.5 GPM AERATOR; MCGUIRE 2167LK FLEXIBLE SUPPLIES AND LOOSE KEY STOP, MCGUIRE 8912 "P" TRAP; WATTS USG-B "UNDERSINK GUARDIAN" (SET AT 110°F), ASSE 1070 COMPLIANT. (2) (3) (4) (5)
P-4A	DRIINKING FOUNTAIN	-	1/2"	1-1/2"	1-1/2"	ELKAY LVRCTLBWSK "EZH20" BOTTLE FILLING STATION & VERSATILE BI-LEVEL EZ COOLER, 115V/60HZ/5.0FLA, 8 GPH COOLING AT 90°F AMBIENT AND 80°F WATER, LAPREZL CANE APRON; McGUIRE CO. 2165 SUPPLY STOP; C8902 CAST BODY 'P' TRAP; MOUNT SPOUT ON ADA UNIT AT 36"AFF MAXIMUM (5)
P-6	MOP SINK	3/4"	3/4"	3"	1-1/2"	STERN WILLIAMS SR-902-BP-2 24"X24"X12" TERRAZZO SINK WITH T-10-VB MOP SINK FAUCET, BP WALL GUARD, T-35 HOSE AND HOSE BRACKET AND T-40 (3) MOP WALL BRACKET
P-5	HANDWASH SINK, UTILITY SINK	1/2"	1/2"	2"	1-1/2"	ELKAY CHS1716 WALL-MTD, 304 STAINLESS STEEL HAND SINK W/ TWO FAUCET HOLES ON 8" CENTERS, 16-3/4" X 15-1/2" X 6"; ELKAY LK940GN04L2H WALL MOUNT, DUAL HANDLE GOOSENECK FAUCET, 1.5 GPM AERATOR; LK-36 SMALL BASKET STRAINER, MCGUIRE B8912 TRAP; WATTS #LI111 1/2" THERMOSTATIC MIXING VALVE W/ #CS CHECK STOP VALVES; SET AT 105°F; ASSE 1070 COMPLIANT (5)
P-7	THREE COMPARTMENT SINK	1/2"	1/2"	2"	1-1/2"	ELKAY 3C18X18218X 12" STANDARD SERIES THREE COMPARTMENT SINK, LEFT & RIGHT DRAINBOARDS, 8 INCH CENTERS; ELKAY LK940AT12L2H WALL MOUNT, DUAL LEVER HANDLE ARC TUBE FAUCET, 1.5 GPM; PROVIDE STAINLESS STEEL BASKET STRAINER, CONTINUOUS WASTE AND TRAP; WATTS #LI111 1/2" THERMOSTATIC MIXING VALVE W/ #CS CHECK STOP VALVES; SET AT 105°F; ASSE 1070 COMPLIANT
FD-1	FLOOR DRAIN	-	-	SEE PLANS	SEE PLANS	ZURN Z415N-Y BODY ASSEMBLY WITH POLISHED NICKEL BRONZE TOP AND TRAP PRIMER CONNECTION, 5-INCH DIA. (9)
FD-2	FLOOR DRAIN	-	-	SEE PLANS	SEE PLANS	ZURN ZN508VP-S BODY ASSEMBLY WITH 8" NICKEL BRONZE TOP AND TRAP PRIMER CONNECTION, 8-INCH DIA. (9)
FS-1	FLOOR SINK - 12" x 12" x 10"	-	-	SEE PLANS	SEE PLANS	ZURN ZN-1902-P-33, C.I. GRATE, TRAP PRIMER CONNECTION AND SEDIMENT BUCKET, WHITE ACID RESISTING EPOXY COATING, HALF GRATE. (9)
FS-2	FLOOR SINK - 8" x 8" x 6"	-	-	SEE PLANS	SEE PLANS	ZURN ZN-1910-P-33, C.I. GRATE, TRAP PRIMER CONNECTION AND SEDIMENT BUCKET, WHITE ACID RESISTING EPOXY COATING, COORDINATE HALF GRATE (9)
AP-1	ACCESS PANEL	-	-	-	-	MIFAB SERIES UA SERIES, 12" X 12" KEY OPERATED LOCK. COORDINATE FINISH WITH ARCHITECT
TP-1	TRAP PRIMER	-	1/2"	-	-	PPP INC. PR-500 WITH DISTRIBUTION UNIT DU-2, DU-3, OR DU-4 WHERE MULTIPLE LINES ARE REQUIRED
EXP-1	EXPANSION TANK	-	-	-	-	WATTS DETA-12-M1
FCO	FLOOR CLEANOUT	-	-	SEE PLANS	-	ZURN Z1400-BZ ADJUSTABLE LEVELING FLOOR CLEANOUT
WCO	WALL CLEANOUT	-	-	SEE PLANS	-	ZURN Z1441 WITH POLISHED CHROME FINISH
WH-1	WATER HEATER	-	-	-	-	A. O. SMITH DEL-120 DURA-POWER PREFERRED COMMERCIAL TANK-TYPE, 120 GALLON; (DUAL FIRING 6 KW ELEMENTS, 12 KW TOTAL; 480V/3ø); 61 GPH @ 60°F AT RECOVERY, 21.7 FLA AT TERMINAL L2 AND 12.5 FLA AT TERMINAL L1 & L3; SET AT 140°F (OPER WT. = 240#) (6) (7) (8)
RCP-1	RECIRCULATION PUMP POTABLE WATER	1/2"	-	-	-	BELL & GOSSETT #NBF-22 SINGLE SPEED RECIRC PUMP, BRONZE BODY, NORYL IMPELLER AND 3/4" FLANGE, 1ϕ/115V/92W, 2940 RPM, ADJUSTABLE THERMOSTAT CONTROL DEVICE, SET AT 120°F
AP-1	ACCESS PANEL	-	-	-	-	WATER-TITE 9000 ICEMAKER BOX W/ BRASS ANGLE VALVE
GI-1	GREASE INTERCEPTOR	-	-	-	-	THERMACO W-200-IS "BIG DIPPER" POINT SOURCE AUTOMATIC GREASE REMOVAL SYSTEM; 115 VAC, 60 HZ, 520 WATTS (4.5 AMPS); 20 GPM MAX FLOW RATE, 20 POUNDS PER HOUR SKIMMING RATE; 40 POUNDS GREASE RETENTION CAPACITY; 1.85 POUNDS NTERNAL SOLIDS STRAINER CAPACITY (11)
TG-1	TRAP GUARD	-	-	-	-	PROSET SYSTEMS "TRAP GUARD" DRAIN INSERT IN LIEU OF TRADITIONAL TRAP PRIMER

1. PROVIDE TRIP LEVER ON OPEN SIDE OF RESTROOM. SEE PLANS.
2. PROVIDE OFFSET DRAIN.
3. PROVIDE TRUEBRO HANDI-LAV GUARD KITS #102 AND #105 OFFSET DRAIN.
4. REFER TO ARCHITECTURAL PLANS FOR ADA INSTALLATION HEIGHTS.
5. PROVIDE IN-WALL, FLOOR MOUNTED FIXTURE CARRIER
6. PROVIDE GALVANIZED DRAIN PAN.
7. PROVIDE VACUUM RELIEF VALVE.
8. PROVIDE EXPANSION TANK, EXP-1, FOR POTABLE WATER.
9. USE TG-1 IN LIEU OF TRAP PRIMER
10. COORDINATE EXACT LOCATION WITH ARCHITECT.
11. THE SPECIFIED DEVICE HAS A NOTED TOTAL FLOW-THROUGH RATING OF 20 GPM MAXIMUM AND PROVIDES 40 POUNDS OF GREASE RETENTION CAPACITY PER IPC 1003.3.4.1.

WATER HAMMER ARRESTER SCHEDULE

"PDI" CROSS REF.	N.P.T.	FIXTURE UNIT CAPACITY	LOCATION	SIOUX CHIEF MODEL NO. OR EQUAL	REMARKS
AA	1/2"	1-4	ACCESSIBLE VIA ACCESS PANEL	660	PISTON OPERATED, MAINTENANCE FREE, MIL-D-82036, TYPE II, NON-BLADDER TYPE. PD-WH-201 (R1983)
A	1/2"	5-11		652-A	PISTON OPERATED, MAINTENANCE FREE, MIL-D-82036, TYPE II, NON-BLADDER TYPE. PD-WH-201 (R1983)
B	3/4"	12-32		653-B	PISTON OPERATED, MAINTENANCE FREE, MIL-D-82036, TYPE II, NON-BLADDER TYPE. PD-WH-201 (R1983)
C	1"	33-60		654-C	PISTON OPERATED, MAINTENANCE FREE, MIL-D-82036, TYPE II, NON-BLADDER TYPE. PD-WH-201 (R1983)
D	1"	61-113		655-D	PISTON OPERATED, MAINTENANCE FREE, MIL-D-82036, TYPE II, NON-BLADDER TYPE. PD-WH-201 (R1983)

PLUMBING LEGEND

MARK	DESCRIPTION	
—— - - ——	COLD WATER	CW
—— - - ——	HOT WATER PIPING (120°)	HW
—— - - - - ——	HOT WATER RETURN PIPING (120°)	HWR
——SS——	SANITARY SEWER PIPING	SW
FCO	FLOOR CLEANOUT	
- - -V- - -	VENT PIPING	
P-X	FIXTURE WITH MARK	
	GATE VALVE	
	ELBOW DOWN	
	ELBOW UP	
	ELBOW FITTING	
	TEE FITTING	
——D——	CONDENSATE OR OVERFLOW DRAIN PIPING	
WCO	WALL CLEANOUT	
	CLEANOUT	
(AE)	INDICATES ASSUMED EXISTING	
(E)	INDICATES EXISTING	
FS	FLOOR SINK	
	BALL VALVE	
1	DENOTES PLUMBING KEYED NOTE	
AFF	ABOVE FINISHED FLOOR	
A	DENOTES PLUMBING DEMOLITION KEYED NOTE	
POC	POINT OF CONNECTION	
VTR	VENT THRU ROOF	
AC	ABOVE CEILING	
BFF	BELOW FINISH FLOOR	
WHA	WATER HAMMER ARRESTOR	
CW	COLD WATER	
HW	HOT WATER	
SW	SOFT WATER	
TW	TEMPERED WATER	
G	GAS PIPING	

NOTE: NOT ALL MARKS MAY BE USED.

REVISIONS

NO.	DESCRIPTION	DATE

PETER LEWIS ARCHITECT + ASSOCIATES
334 West Water Street Kerrville, TX 78028
(830) 896-4320 (830) 896-4326
www.pwlarchitect.com

City of Kerrville Athletic Complex Field House

Kerrville, Texas

NOT PUBLISHED. ALL RIGHTS RESERVED BY THE ARCHITECT. DRAWINGS AND SPECIFICATIONS AS INSTRUMENTS OF SERVICE ARE AND SHALL REMAIN THE PROPERTY OF THE ARCHITECT. THEY SHALL NOT BE USED ON OTHER PROJECTS OR EXTENSIONS TO THIS PROJECT EXCEPT BY AGREEMENT IN WRITING AND WITH APPROPRIATE COMPENSATION TO THE ARCHITECT. CONTRACTOR IS RESPONSIBLE FOR THE CONFIRMING AND CORRELATING DIMENSIONS AT JOB SITE. THE ARCHITECT WILL NOT BE RESPONSIBLE FOR CONSTRUCTION MEANS, METHODS, TECHNIQUES, SEQUENCES OR FOR SAFETY PRECAUTIONS AND PROGRAMS IN CONNECTION WITH THE PROJECT.

PROJECT NO. 20-1605 DATE 10/21/16

STATE OF TEXAS BRUCE CECIL SMITH 68595 REGISTERED PROFESSIONAL ENGINEER 6-30-17
10/21/16

ESA Mechanical & Electrical Engineering, Inc.
1100 NW Loop 410, Suite 810 210.342.3483
San Antonio, Texas 78213 F 210.342.3641
TBPE FIRM REGISTRATION NO. F-4137
JOB NO.: 16022

Plumbing Legend & Schedules

SHEET NUMBER

P3.1

10/21/2016 2:58:01 PM

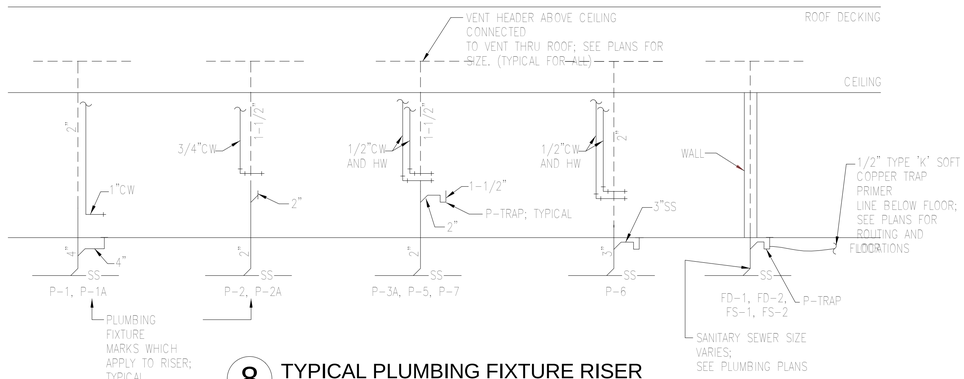

8 TYPICAL PLUMBING FIXTURE RISER
Scale: N.T.S.

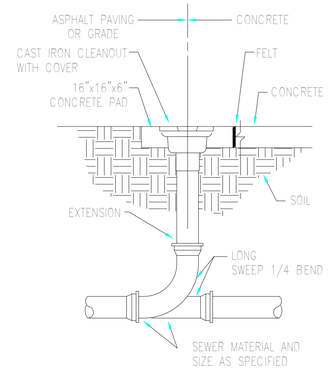

2 YARD CLEANOUT DETAIL
Scale: N.T.S.

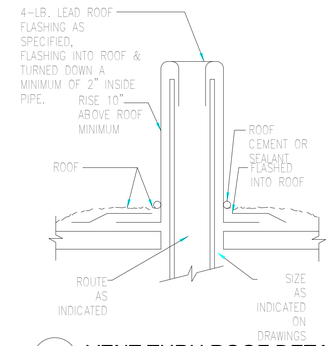

1 VENT THRU ROOF DETAIL
Scale: N.T.S.

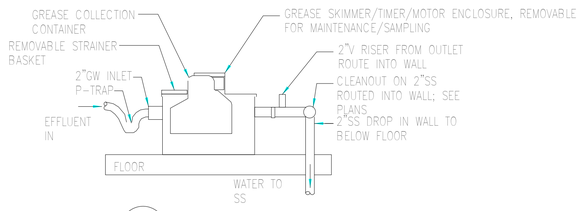

9 GI-1 DETAIL
Scale: N.T.S.

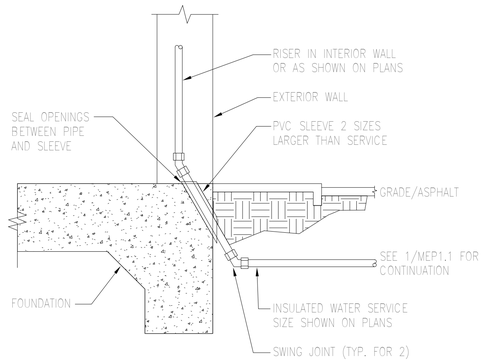

3 WATER ENTRANCE DETAIL
Scale: N.T.S.

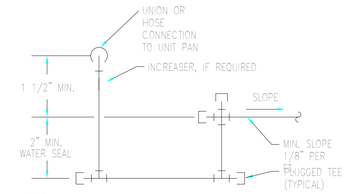

4 CONDENSATE TRAP DETAIL
Scale: N.T.S.

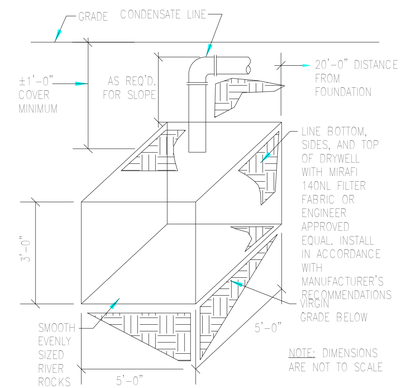

5 Drywell Detail
Scale: N.T.S.

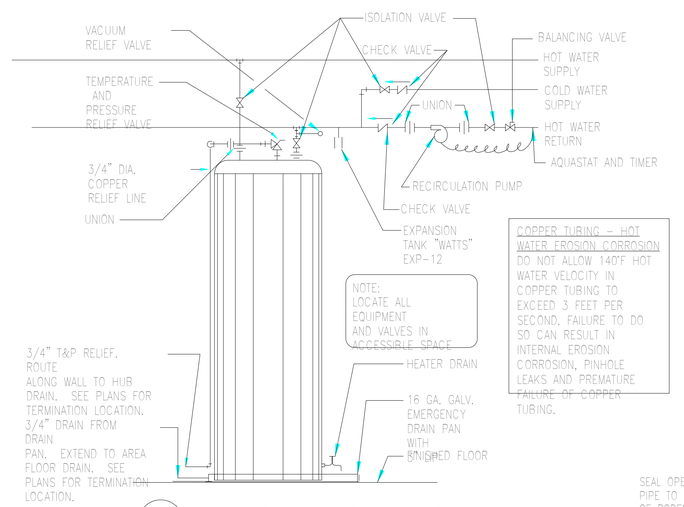

COPPER TUBING - HOT WATER EROSION CORROSION
DO NOT ALLOW 140°F HOT WATER VELOCITY IN COPPER TUBING TO EXCEED 3 FEET PER SECOND. FAILURE TO DO SO CAN RESULT IN INTERNAL EROSION CORROSION, PINHOLE LEAKS AND PREMATURE FAILURE OF COPPER TUBING.

7 WATER HEATER 'WH-1' DETAIL
Scale: N.T.S.

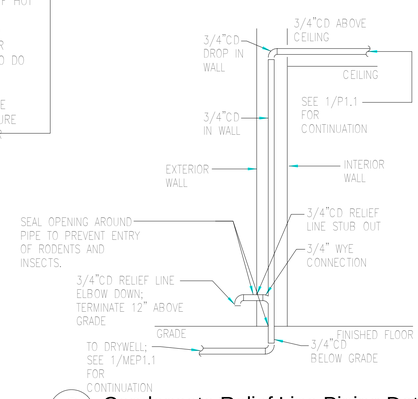

6 Condensate Relief Line Piping Detail
Scale: N.T.S.

REVISIONS

NO.	DESCRIPTION	DATE

PETER LEWIS
ARCHITECT + ASSOCIATES
334 West Water Street
Kerrville, TX 78028
(830) 896-4320
(830) 896-4226
www.pwlarchitect.com

City of Kerrville Athletic Complex Field House

Kerrville, Texas

NOT PUBLISHED: ALL RIGHTS RESERVED BY THE ARCHITECT. DRAWINGS AND SPECIFICATIONS AS INSTRUMENTS OF SERVICE ARE AND SHALL REMAIN THE PROPERTY OF THE ARCHITECT. THEY SHALL NOT BE USED ON OTHER PROJECTS OR EXTENSIONS TO THIS PROJECT, EXCEPT BY AGREEMENT IN WRITING AND APPROPRIATE COMPENSATION TO THE ARCHITECT. CONTRACTOR IS RESPONSIBLE FOR THE CONFIRMING AND CORRELATING DIMENSIONS AT JOB SITE. THE ARCHITECT WILL NOT BE RESPONSIBLE FOR CONSTRUCTION MEANS, METHODS, TECHNIQUES, SEQUENCES OR FOR SAFETY PRECAUTIONS AND PROGRAMS IN CONNECTION WITH THE PROJECT.

PROJECT NO.	DATE
20-1605	10/21/16

Plumbing Details and Riser

SHEET NUMBER

P3.2

STATE OF TEXAS
BRUCE CECIL SMITH
68595
REGISTERED PROFESSIONAL ENGINEER
6-30-17
10/21/16

ESA Mechanical & Electrical Engineering, Inc.
1100 NW Loop 410, Suite 810 210.342.3483
San Antonio, Texas 78213 F 210.342.3641
TBPE FIRM REGISTRATION NO. F-4137

JOB NO.: 16022

10/21/2016 2:58:02 PM

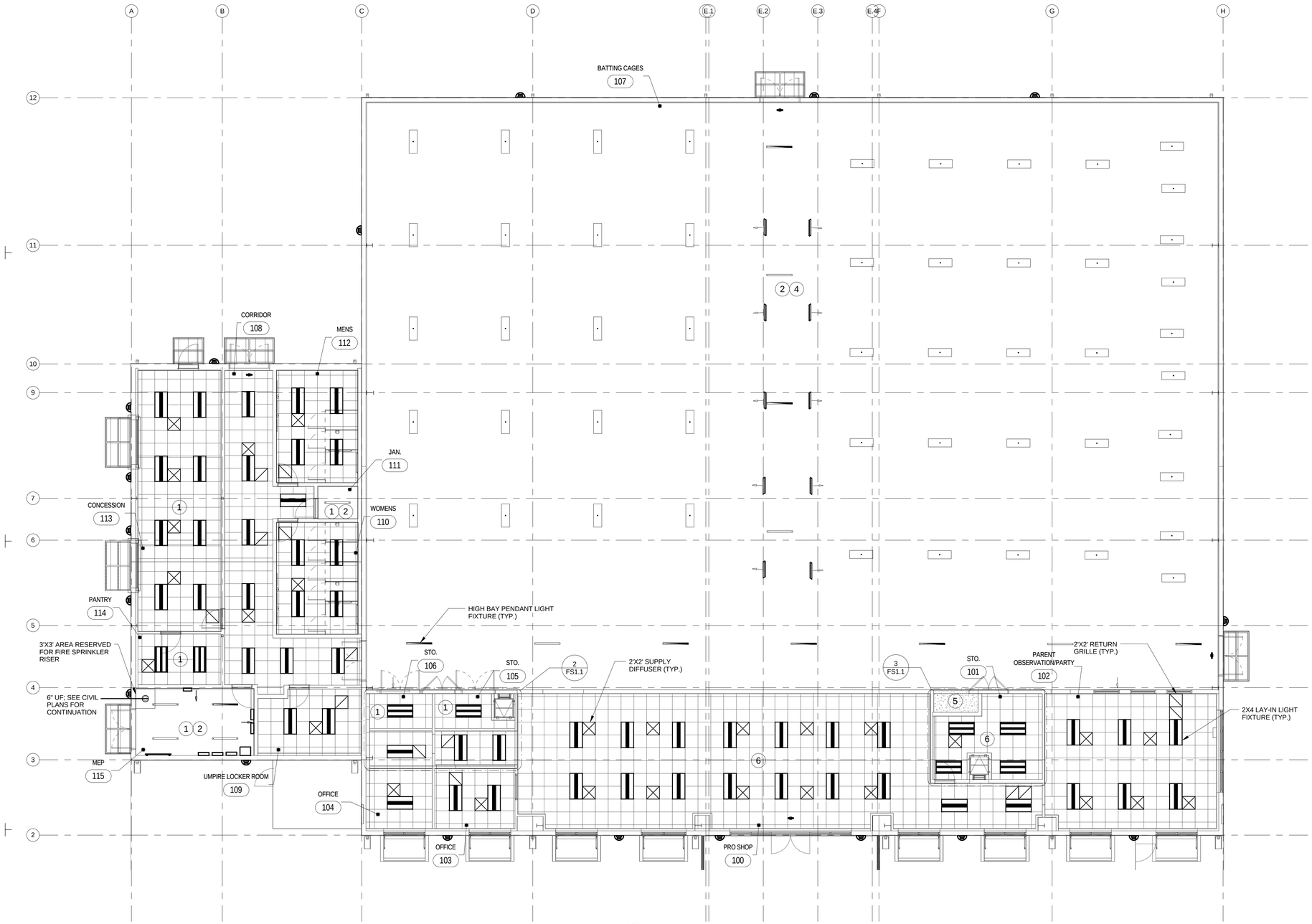

1 Fire Sprinkler Plan

1/8" = 1'-0"

FIRE SPRINKLER KEYED NOTES ◯ : (SHEET FS1.1 ONLY)

1. SPRINKLER FOR ORDINARY HAZARD GROUP 1 OCCUPANCY.
2. NO CEILING THIS ROOM. EXPOSED WRAPPED INSULATION ON UNDERSIDE OF DECK.
3. TOP OF FIRE SPRINKLER RISER SHALL BE 10'-0" AFF MAXIMUM.
4. PROVIDE 'SPRINKGUARD THREADGUARD' GUARDS ON SPRINKLER HEADS TO PROJECT SPRINKLER HEADS FROM DAMAGE.
5. GYPBOARD CEILING.
6. SPRINKLE FOR ORDINARY HAZARD GROUP 2 OCCUPANCY.

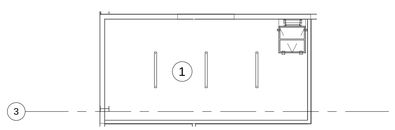

2 Mech. Mezz. (West) Fire Sprinkler Plan

1/8" = 1'-0"

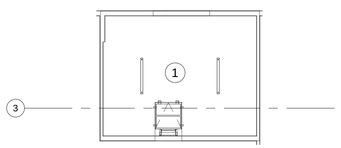

3 Mech. Mezz. (East) Fire Sprinkler Plan

1/8" = 1'-0"

GENERAL SPRINKLER NOTES:

1. FULL CONSIDERATION SHALL BE GIVEN TO AESTHETIC CONSIDERATIONS OF THE FACILITY. HEADS SHALL BE LOCATED IN CEILINGS, TRIM, OR OTHER ARCHITECTURAL FEATURES TO MINIMIZE ADVERSE APPEARANCES OR CONFLICTS. HEADS SHALL BE SYMMETRICALLY LOCATED WHERE FEASIBLE. FINISHED HEADS SHALL BE INSTALLED IN ALL FINISHED AREAS. HEADS SHALL BE CENTERED IN CEILING TILES.
2. GUARDS SHALL BE INSTALLED ON ALL HEADS SUBJECT TO PHYSICAL DAMAGE.
3. SYSTEM SHALL BE IN COMPLETE COMPLIANCE WITH NFPA 13 AND ALL STATE/LOCAL REQUIREMENTS. PLANS MUST CONFORM TO THE LOCALLY ADOPTED FIRE CODE, APPLICABLE NFPA CODES AND LOCAL CITY AMENDMENTS. SPRINKLER CONTRACTOR SHALL REFER TO OTHER DISCIPLINES SUCH AS ARCHITECTURAL, STRUCTURAL, MECHANICAL, PLUMBING, AND ELECTRICAL FOR OTHER REQUIREMENTS, RESTRICTIONS, CONFLICTS, ETC. THE FOLLOWING SPRINKLER PLANS ARE CONCEPTUAL IN NATURE AND ARE NOT INTENDED TO REPRESENT THE DETAILED SCOPE OF SPRINKLER WORK REQUIRED. ADDITIONAL WORK REQUIRED AS A RESULT OF FAILING TO COORDINATE WITH OTHER TRADES WILL BE PERFORMED AT NO ADDITIONAL COST TO THE OWNER OR A/E.
4. CONTRACTOR SHALL CONDUCT FIRE FLOW TEST AS REQUIRED TO VERIFY FLOW BEFORE BEGINNING FINAL DESIGN.
5. PLASTIC PIPING NOT ACCEPTABLE.
6. DESIGN FOR LIGHT HAZARD OCCUPANCY UNLESS OTHERWISE NOTED.
7. ALL SPRINKLER HEADS IN FINISHED AREAS SHALL BE HIDDEN TYPE AUTOMATIC SPRINKLER HEADS WITH WHITE COVER PLATES. PROVIDE UPRIGHT HEADS WITH BRASS FINISH FOR AREAS WITHOUT CEILINGS.
8. ARCHITECT RESERVES THE RIGHT TO ADJUST HEAD LOCATIONS AND IF NECESSARY, HEAD QUANTITIES DURING SUBMITTAL PHASE.
9. EXPOSED FIRE SPRINKLER PIPING SHALL BE PAINTED AS DIRECTED BY ARCHITECT.
10. CONTRACTOR SHALL VISIT THE SITE AND SHALL BECOME FAMILIAR WITH THE EXISTING SITE CONDITIONS AND PROJECT SCOPE PRIOR TO SUBMITTING BID.
11. ARRANGE WITH AUTHORITIES FOR PERMITS AND FEES AND PAYING ALL CHARGES, INCLUDING INSPECTIONS.
12. FIRE SEAL ALL PIPE PENETRATIONS THROUGH FIRE RATED ASSEMBLIES AS REQUIRED. FIRE CAULK ANY PENETRATIONS MADE TO DEMISING WALLS AND NEW WALLS.
13. ALL SPRINKLER HEADS IN AREAS WITHOUT CEILINGS SHALL BE EXPOSED TYPE UPRIGHT AUTOMATIC SPRINKLER HEADS. COORDINATE FINISH WITH ARCHITECT.
14. CEILING HEIGHTS AND TYPES VARY THROUGHOUT BUILDING.
15. ALL SPRINKLER PIPING SHALL BE HIDDEN IN FINISHED AREAS.
16. SPRINKLER LAYOUT IN EXPOSED AREAS IS CRITICAL TO MINIMIZE VISIBILITY OF SPRINKLER SYSTEM. ANY CHANGE IN LAYOUT DUE TO CONFLICTS/SPRINKLER SYSTEM DESIGN REQUIREMENT SHALL BE COORDINATED WITH ARCHITECT DURING SPRINKLER SYSTEM DESIGN PHASE.
17. INSTALL FIRE SPRINKLER PIPING AS HIGH AS POSSIBLE.
18. SPRINKLER LAYOUT ABOVE BATTING CAGES IS CRITICAL TO MINIMIZE DAMAGE CAUSED BY BASEBALLS. PROVIDE 'SPRINKGUARD THREADGUARD' GUARDS ON ALL SPRINKLER HEADS SUBJECT TO PHYSICAL DAMAGE.

REVISIONS

NO.	DESCRIPTION	DATE

PETER LEWIS
ARCHITECT + ASSOCIATES
334 West Water Street
Kerrville, TX 78028
(830) 896-4220
(830) 896-4226
www.pwlarchitect.com

City of Kerrville Athletic Complex Field House

Kerrville, Texas

NOT PUBLISHED. ALL RIGHTS RESERVED BY THE ARCHITECT. DRAWINGS AND SPECIFICATIONS AS INSTRUMENTS OF SERVICE ARE AND SHALL REMAIN THE PROPERTY OF THE ARCHITECT. THE USE OF THESE DRAWINGS AND SPECIFICATIONS PERTAINING TO THIS PROJECT EXCEPT BY AGREEMENT IN WRITING AND WITH APPROPRIATE COMPENSATION TO THE ARCHITECT. CONTRACTOR IS RESPONSIBLE FOR THE CONFIRMING AND CORRELATING DIMENSIONS AT JOB SITE. THE ARCHITECT WILL NOT BE RESPONSIBLE FOR CONSTRUCTION MEANS, METHODS, TECHNIQUES, SEQUENCES OR FOR SAFETY PRECAUTIONS AND PROGRAMS IN CONNECTION WITH THE PROJECT.

PROJECT NO.	DATE
20-1605	10/21/16

Fire Sprinkler Plan

SHEET NUMBER

FS1.1

STATE OF TEXAS
BRUCE CECIL SMITH
68595
REGISTERED PROFESSIONAL ENGINEER
6-30-17
10/21/16

ESA Mechanical & Electrical Engineering, Inc.
1100 NW Loop 410, Suite 810 210.342.3483
San Antonio, Texas 78213 F 210.342.3641
TBPE FIRM REGISTRATION NO. F-4137
JOB NO.: 16022

10/21/2016 2:57:39 PM

THE CITY OF KERRVILLE, TEXAS

CIVIL CONSTRUCTION PLANS FOR

ATHLETIC COMPLEX FIELD HOUSE

ISSUED FOR CONSTRUCTION

MAYOR
BONNIE WHITE

CITY COUNCIL
STEPHEN P. FINE, MAYOR PRO TEM
GLENN ANDREW
MARY ELLEN SUMMERLIN
GENE ALLEN

VICINITY MAP

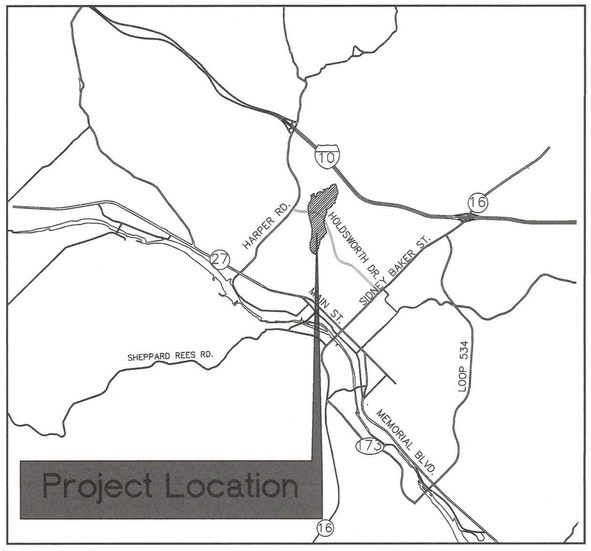

INDEX OF DRAWINGS

C1	COVER SHEET, SHEET INDEX, AND VICINITY MAP
C2	GENERAL NOTES
C3	DIMENSIONAL CONTROL PLAN
C4	GRADING, DRAINAGE AND PAVING PLAN
C5	UTILITY PLAN
C6	FIELD LAYOUT
C7	FENCE DETAILS
C8	PAVING DETAILS
C9	UTILITY DETAILS SHEET 1 OF 2
C10	UTILITY DETAILS SHEET 2 OF 2
C11	CONTRACTOR STAGING AREA MAP
C12	SURVEY HORIZONTAL AND VERTICAL CONTROL PLAN

CITY APPROVAL

These plans have been reviewed and approved by _____ on 10/31/16 (Date)

This approval will become void after one year of the indicated approval date. Exceptions to this approval are as followed

_____

_____

_____

By approving these plans, the City of Kerrville does not assume any liability for engineering design nor does approval release the design engineer from liability for correction errors or omission in the design both during and after construction.

STATE OF TEXAS
JOHN M. HEWITT
66142
LICENSED
PROFESSIONAL ENGINEER
10/28/16

Hewitt Engineering Inc.
Consulting Engineering Services
716 Barnett Street ◆ Kerrville, Texas 78028 ◆ 830.315.8800
TBPE Registration No. F-10739 ◆ www.hewitt-inc.com

ATHLETIC COMPLEX FIELD HOUSE

Drawing Name: DBAT_102116.DWG

GENERAL SITE WORK NOTES

GENERAL

1. THE TERM "CONTRACTOR" SHALL INCLUDE THE GENERAL CONTRACTOR AND ALL APPLICABLE SUBCONTRACTORS. THE GENERAL CONTRACTOR SHALL BE RESPONSIBLE FOR OVERALL COORDINATION OF VARIOUS TRADES/SUBCONTRACTORS, AND THE SATISFACTORY PERFORMANCE OF THE WORK.

2. THE CONTRACTOR SHALL VISIT THE PROJECT SITE AND REVIEW THE CONSTRUCTION DOCUMENTS, AND SHALL BE SATISFIED REGARDING ALL EXISTING CONDITIONS, GRADES, DIMENSIONS AND PROPOSED WORK. SHOULD THE CONTRACTOR FIND ANY DISCREPANCY BETWEEN EXISTING CONDITIONS AND THE CONSTRUCTION DOCUMENTS, BE IN DOUBT AS TO ANY PART OF THE WORK, OR WOULD LIKE TO PROPOSE AN ALTERNATE METHOD OF WORK, THE ENGINEER SHALL BE NOTIFIED (AND THE CONTRACTOR SHALL A RECEIVE WRITTEN RESPONSE FROM ENGINEER) PRIOR TO CONSTRUCTION OF THAT PART OF THE WORK.

3. AN INDEPENDENT MATERIALS TESTING LABORATORY STAFFED WITH AT LEAST ONE (1) FULL-TIME PROFESSIONAL ENGINEER (GEOTECHNICAL/MATERIALS ENGINEER) AND QUALIFIED TO PERFORM THE QUALITY CONTROL/TESTING OUTLINED BELOW SHALL BE RETAINED BY THE CONTRACTOR FOR THIS PROJECT. THE CONTRACTOR SHALL INFORM THE ENGINEER OF THE SELECTED TESTING LABORATORY AND SHALL PROVIDE THE TESTING LABORATORY WITH THESE CONSTRUCTION DOCUMENTS (AND THE INITIAL GEOTECHNICAL ENGINEERING STUDY, IF NOT BY THE SAME COMPANY) PRIOR TO CONSTRUCTION. IT SHALL BE THE CONTRACTOR'S RESPONSIBILITY TO COORDINATE ALL TESTING AND CONSTRUCTION OBSERVATION, AND TO ENSURE THAT ENGINEER RECEIVES RESULTING REPORTS IN A TIMELY MANNER.

4. THE CONTRACTOR SHALL BE RESPONSIBLE FOR OBTAINING ALL NECESSARY PERMITS.

5. CONTRACTOR SHALL BE RESPONSIBLE FOR LOCATING AND PROTECTING ALL EXISTING UTILITIES AND OTHER IMPROVEMENTS TO REMAIN ON THE SITE. EXISTING UTILITIES OR OTHER IMPROVEMENTS TO REMAIN THAT ARE DAMAGED AS A RESULT OF CONSTRUCTION OF THIS PROJECT SHALL BE REPAIRED OR REPLACED AT CONTRACTOR'S EXPENSE.

6. CONTRACTOR SHALL VERIFY ALL SITE CONDITIONS, GRADES AND DIMENSIONS, LOCATIONS, ELEVATIONS AND SIZES OF EXISTING AND PROPOSED UTILITIES AND OTHER IMPROVEMENTS, BUILDING SETBACK LINES AND EASEMENTS WITH ALL PROJECT DRAWINGS/TRADES PRIOR TO CONSTRUCTION OR ORDERING OF MATERIALS. ANY CONFLICTS OR DISCREPANCIES SHALL BE BROUGHT TO THE ATTENTION OF THE ENGINEER. EXISTING UTILITIES OR OTHER IMPROVEMENTS TO REMAIN THAT ARE DAMAGED AS A RESULT OF CONSTRUCTION OF THIS PROJECT SHALL BE REPAIRED AT CONTRACTOR'S EXPENSE.

7. UNLESS OTHERWISE SHOWN, ALL MATERIALS, CONSTRUCTION AND TESTING SHALL BE IN ACCORDANCE WITH THE PROJECT DRAWINGS AND SPECIFICATIONS, ALL APPLICABLE LOCAL, STATE AND FEDERAL (INCLUDING OSHA) REGULATIONS, AND THE CITY OF KERRVILLE STANDARD SPECIFICATIONS AND CONTRACT DOCUMENTS, AND STANDARD DRAWING DETAILS, UPDATED JANUARY 2005 (AVAILABLE AT www.kerrvilletx.gov).

8. SITE WORK DESIGNS ARE BASED ON THE GEOTECHNICAL ENGINEERING STUDY DATED MAY 18, 2016 BY ROCK ENGINEERING & TESTING LABORATORY, INC. (RETL JOB NO. G216136), AND THE BOUNDARY AND TOPOGRAPHIC SURVEY DATED APRIL 16, 2015 BY MDS LAND SURVEYING CO., INC. CONTRACTOR SHALL RETAIN A LICENSED SURVEYOR TO ESTABLISH PROPERTY AND CONSTRUCTION LINES.

9. CONTRACTOR SHALL FAMILIARIZE HIMSELF WITH THE ABOVE-MENTIONED GEOTECHNICAL ENGINEERING STUDY, AND NOTIFY ENGINEER IMMEDIATELY IF VARYING CONDITIONS ARE ENCOUNTERED.

10. CONTRACTOR SHALL PROTECT CITY MONUMENTS AND BENCHMARKS DURING CONSTRUCTION. ANY MONUMENT OR BENCHMARK THAT IS REMOVED, DAMAGED OR OTHERWISE DISTURBED SHALL BE REPLACED BY A SURVEYOR APPROVED BY THE CITY OF KERRVILLE AND AT THE CONTRACTOR'S EXPENSE.

11. UNLESS SHOWN OTHERWISE, MAINTAIN THE FOLLOWING MINIMUM SLOPES:

SURFACE	SHEET FLOW	CHANNELIZED FLOW
EARTH	1.0%	0.5%
PAVEMENT	0.5%	0.5%

12. INTERPOLATE LINEARLY BETWEEN ELEVATIONS.

13. ALL ELEVATIONS ARE IN FEET.

14. PROPOSED ELEVATIONS REFLECT FINISHED GRADES (TOP OF PAVEMENT, TOP SOIL OR OTHER IMPROVEMENTS).

15. WHERE TRENCHING IS UTILIZED DURING CONSTRUCTION, NO MORE THAN ONE HUNDRED (100) FEET OF TRENCH SHALL BE OPEN AT ANY GIVEN TIME. TRENCHES LEFT OPEN DURING NON-WORKING HOURS SHALL BE ENCLOSED WITH ORANGE SAFETY FENCING AT LEAST FIVE (5) FEET BEYOND THE TRENCH PERIMETER.

16. CONTRACTOR SHALL IMPLEMENT AND STRICTLY FOLLOW A TRENCH/EXCAVATION SAFETY PLAN CONFORMING TO THE REQUIREMENTS OF OSHA 29 CFR PART 1926, SUBPART P, (SEE www.osha.gov).

17. PAVEMENT PRESERVATION TECHNIQUES SHALL BE UTILIZED BY THE CONTRACTOR AT ALL TIMES. TRACK-MOUNTED EQUIPMENT IS PROHIBITED ON PAVED SURFACES.

18. CONTRACTOR SHALL KEEP THE CONSTRUCTION SITE FREE OF ACCUMULATED WASTE MATERIAL, DEBRIS AND RUBBISH. AT THE TIME OF COMPLETION OF CONSTRUCTION AND PRIOR TO THE CITY SCHEDULED "WALK THROUGH", THE CONTRACTOR SHALL REMOVE FROM THE SITE ALL TOOLS, EQUIPMENT, SURPLUS MATERIALS, DEBRIS AND SHALL LEAVE THE SITE IN A "BROOM CLEAN" CONDITION.

19. DUST GENERATED DURING CONSTRUCTION DUE TO SWEEPING, SAWCUTTING, JOINT CLEANING, HIGH WIND, ETC. SHALL BE KEPT TO A MINIMUM BY THE USE OF VACUUMS, WATER OR OTHER MEASURES.

20. CONTRACTOR SHALL PROVIDE AND MAINTAIN SANITARY CONVENIENCE FACILITIES AT THE CONSTRUCTION SITE FOR THE DURATION OF THE PROJECT.

21. CONTRACTOR SHALL NOT INTERRUPT UTILITY SERVICE OF NEIGHBORING PROPERTIES.

22. CONTRACTOR SHALL COORDINATE WORK AND NOT INTERRUPT OR DISTURB ONGOING CONSTRUCTION FOR KERRVILLE SPORTS COMPLEX PROJECT.

23. FOLLOWING CONSTRUCTION, CONTRACTOR SHALL PROVIDE ENGINEER WITH ONE (1) SET OF CIVIL DRAWINGS SHOWING AS-BUILT PLAN DIMENSIONS AND ELEVATIONS, AND NOTING ANY DEVIATIONS FROM THE CONSTRUCTION DOCUMENTS.

ACCESSIBILITY

1. TEXAS ACCESSIBILITY STANDARDS (TAS) OF THE ARCHITECTURAL BARRIERS ACT, TEXAS DEPT. OF LICENSING AND REGULATION, SHALL BE USED AND FOLLOWED FOR THIS PROJECT.

2. ACCESSIBLE PARKING SPACES SHALL BE DESIGNATED AS RESERVED BY SIGNS SHOWING THE SYMBOL OF ACCESSIBILITY PAINTED ON THE PARKING SPACES, AS SHOWN, AND BY INSTALLATION OF SIGNAGE.

3. REFER TO TAS, TEXAS ACCESSIBILITY STANDARDS, FOR ADDITIONAL INFORMATION (www.license.state.tx.us/ab/abtas.htm), IN PARTICULAR REF. STANDARDS REGARDING ACCESSIBLE ROUTES, PARKING, RAMPS, RAILINGS AND STEPS (www.license.state.tx.us/ab/tas/tassection04_01.pdf AND www.license.state.tx.us/ab/tas/tassection04_02_to04_09.pdf). ALL CURB RAMPS SHALL COMPLY WITH TECHNICAL MEMORANDUM TM 08-01, ISSUED JUNE 2008 BY TDLR, REGARDING DETECTABLE WARNING SURFACES. SEE www.license.state.tx.us/ab/info/TM08-01.pdf FOR MORE INFORMATION.

4. ALL CURB RAMPS SHALL COMPLY WITH TECHNICAL MEMORANDUM TM 08-01, ISSUED JUNE 2008 BY TDLR, REGARDING DETECTABLE WARNING SURFACES. SEE www.license.state.tx.us/ab/info/TM08-01.pdf FOR MORE INFORMATION.

5. FOLLOWING CONSTRUCTION, THE CONTRACTOR SHALL SUBMIT A TDLR REPORT BY AN INDEPENDENT ACCESSIBILITY REVIEW CONTRACTOR TO TXDOT NOTING ONLY INSPECTIONS MADE WITHIN THE HIGHWAY RIGHT-OF-WAY.

EARTHWORK

1. SEE FOUNDATION DRAWINGS BY MAXWELL ENGINEERING AND GENERAL NOTES FOR SITE WORK REQUIREMENTS BENEATH AND WITHIN THREE (3) FEET OF BUILDINGS.

2. AREAS WHICH UNDERLIE PROPOSED BULK FILL, SELECT FILL, FLATWORK, PAVEMENT, CURBS, WALKS OR OTHER SITE WORK SHALL BE CLEARED AND STRIPPED OF ALL EXISTING FILL, TREES, BRUSH, ROOTS, VEGETATION, LOGS, RUBBISH, LOOSE ROCK, EXISTING PAVING AND OTHER OBJECTIONABLE MATERIAL. GRADING SHALL CONTINUE TO A DEPTH OF SIX (6) INCHES BENEATH THE NATURAL GROUND SURFACE, OR AS REQUIRED TO INSTALL PROPOSED IMPROVEMENTS ACCORDING TO THESE DRAWINGS, WHICHEVER IS DEEPER. ABANDONED UTILITIES AND STRUCTURES SHALL BE DEMOLISHED AND REMOVED. COORDINATE DEMOLITION OF EXISTING IMPROVEMENTS WITH ADJACENT PROPERTY OWNERS. TREES, STUMPS AND ROOTS THAT ARE TO BE REMOVED AND THAT ARE BENEATH PROPOSED IMPROVEMENTS SHALL BE GRUBBED TO A MINIMUM DEPTH OF THREE (3) FEET BELOW EXISTING GROUND SURFACE. ENSURE ADEQUATE SUPPORT FOR EXISTING IMPROVEMENTS ON NEIGHBORING PROPERTIES. ALL HOLES CREATED BY THESE OPERATIONS SHALL BE BACKFILLED AND COMPACTED ACCORDING TO THESE SPECIFICATIONS. STRIPPED, EXCAVATED, DEMOLISHED AND OTHER REMOVED MATERIAL SHALL BE PROPERLY DISPOSED OF BY THE CONTRACTOR.

3. EXCAVATED MATERIAL MAY BE USED AS BULK SITE WORK FILL MATERIAL, PROVIDED THIS MATERIAL IS FREE OF ORGANICS, TRASH, RUBBLE OR OTHER OBJECTIONABLE MATERIAL, AND HAS NO PARTICLE SIZE GREATER THAN FOUR (4) INCHES IN DIAMETER. UNUSED EXCAVATED MATERIAL SHALL BE REMOVED FROM THE SITE AND PROPERLY DISPOSED OF BY THE CONTRACTOR.

4. AFTER EXCAVATION WORK, THE EXPOSED SUBGRADE SHALL BE PROOF-ROLLED UNDER THE SUPERVISION OF THE GEOTECHNICAL ENGINEER WITH CONSTRUCTION EQUIPMENT WEIGHING AT LEAST TWENTY (20) TONS TO DETECT ANY SOFT AREAS PRIOR TO INSTALLATION OF SELECT FILL. IF SOFT AREAS ARE DETECTED, AS DETERMINED BY THE GEOTECHNICAL ENGINEER, THEY SHALL BE UNDERCUT AND REPLACED WITH BULK OR SELECT FILL, AS REQUIRED TO INSTALL IMPROVEMENTS AS SHOWN ON THE DRAWINGS.

5. FOLLOWING PROOF-ROLLING, THE UPPER SIX INCHES (6") OF EXPOSED SUBGRADE SHALL BE SCARIFIED, MOISTURE CONDITIONED AND COMPACTED BY MECHANICAL COMPACTION EQUIPMENT. SUBGRADE SHALL BE COMPACTED TO A MINIMUM OF NINETY-FIVE PERCENT (95%) OF THE MAXIMUM DRY DENSITY WITHIN OPTIMUM TO FOUR PERCENT ABOVE (0% TO +4%) THE OPTIMUM MOISTURE CONTENT AS DETERMINED BY ASTM D698 (STANDARD PROCTOR). SEE BELOW FOR TESTING REQUIREMENTS.

6. AFTER SUBGRADE PREPARATION, BULK FILL MATERIAL (WHERE REQUIRED) AND FLEXIBLE BASE MATERIAL SHALL BE INSTALLED ON TOP OF THE PREPARED SUBGRADE. IMPORTED BULK FILL MATERIAL SHALL HAVE A PLASTICITY INDEX (PI) BETWEEN FIVE (5) AND THIRTY-FIVE (35), AND A LIQUID LIMIT NOT EXCEEDING 40 PERCENT. BULK FILL SHALL BE FREE OF ORGANICS, TRASH, RUBBLE OR OTHER OBJECTIONABLE MATERIAL, AND SHALL HAVE NO PARTICLE SIZE GREATER THAN THREE (3) INCHES IN DIAMETER.

7. BULK FILL SHALL BE COMPACTED IN 8-INCH (MAX.) LOOSE LIFTS (6" MAX. COMPACTED) TO A MINIMUM DENSITY OF NINETY-FIVE PERCENT (95%) OF THE STANDARD PROCTOR DENSITY (ASTM D698), WITHIN OPTIMUM TO PLUS FOUR PERCENT (0% TO +4%) OF OPTIMUM MOISTURE CONTENT.

8. FLEXIBLE BASE MATERIAL SHALL CONFORM TO TEXAS DEPARTMENT OF TRANSPORTATION (TxDOT) STANDARD SPECIFICATIONS FOR CONSTRUCTION OF HIGHWAYS, STREETS AND BRIDGES (TXDOT STANDARD SPECIFICATIONS) ITEM NO. 247, TYPE A OR B, GRADE 1 OR 2, AND SHALL BE INSTALLED IN 8" (MAX.) LOOSE LIFTS OR 6" (MAX.) COMPACTED LIFTS. BASE FILL MATERIAL SHALL BE COMPACTED TO A MINIMUM OF NINETY-FIVE PERCENT (95%) OF THE MAXIMUM DRY DENSITY AS DETERMINED IN ACCORDANCE WITH ASTM D1557 (MODIFIED PROCTOR), WITHIN PLUS OR MINUS THREE PERCENT (±3%) OF OPTIMUM MOISTURE CONTENT.

9. ALL PROPOSED BULK FILL AND FLEXIBLE BASE MATERIAL SHALL BE TESTED BY AN INDEPENDENT SOIL TESTING LABORATORY FOR SUITABILITY (ASTM D4318, ATTERBERG LIMITS) AND COMPACTION CHARACTERISTICS (ASTM D698, STANDARD PROCTOR, AND ASTM D1557, MODIFIED PROCTOR, AS APPLICABLE) PRIOR TO INSTALLATION.

10. MOISTURE CONTENT AND COMPACTION OF PREPARED SUBGRADE, BULK FILL AND BASE MATERIAL SHALL BE TESTED DURING INSTALLATION. AT LEAST ONE IN-PLACE DENSITY TEST (ASTM D6938) SHALL BE PERFORMED FOR EACH 5,000 SQUARE FEET OF COMPACTED SURFACE PER LIFT OR A MINIMUM OF THREE (3) DENSITY TESTS PER LIFT OR SITE VISIT, WHICHEVER RESULTS IN THE GREATEST NUMBER OF TESTS. AREAS NOT MEETING THE REQUIRED COMPACTION SHALL BE RE-WORKED ACCORDING TO THESE SPECIFICATIONS AND RETESTED UNTIL COMPLIANCE IS MET.

11. CONTRACTOR SHALL COORDINATE AND PAY FOR ALL SOIL TESTING.

12. INSTALL FOUR INCHES (4") OF TOPSOIL TO FINISHED GRADE. TOPSOIL AND INSTALLATION SHALL CONFORM TO TXDOT STANDARD SPECIFICATIONS, ITEM 160.

13. FOLLOWING INSTALLATION OF TOPSOIL, SEED THAT IS APPROPRIATE FOR THE GROWING SEASON AND OF A SPECIES ACCEPTABLE TO THE OWNER SHALL BE BROADCAST BY HYDRAULIC MULCHING AND IN ACCORDANCE WITH TXDOT STANDARD SPECIFICATIONS ITEM 164. CONTRACTOR SHALL WATER SEED AS NEEDED TO ESTABLISH VEGETATION PRIOR TO DEMOBILIZATION.

WATER AND SANITARY SEWER

1. SIZES AND LOCATIONS OF ALL UNDERGROUND UTILITIES (WHETHER OR NOT SHOWN ON THE DRAWINGS) SHALL BE OBTAINED FROM AVAILABLE RECORDS AND FIELD VERIFIED. THE CONTRACTOR SHALL BE RESPONSIBLE FOR CONTACTING ALL FRANCHISE AND CITY UTILITIES A MINIMUM OF FORTY-EIGHT (48) HOURS PRIOR TO CONSTRUCTION, AND SHALL EXCAVATE TO DETERMINE THE LOCATIONS, ELEVATIONS, SIZES, CONDUIT TYPES, ETC. OF ALL UTILITIES.

CITY OF KERRVILLE	(830) 792-8312
"DIG TESS"	(800) DIG-TESS [(830) 344-8377]
ELECTRIC	"
TELEPHONE	"
CABLE TELEVISION	"
GAS	"

2. CONTRACTOR SHALL NOTIFY ENGINEER IMMEDIATELY FOR POSSIBLE DESIGN MODIFICATIONS IF ANY DISCREPANCIES ARE DETERMINED BETWEEN UTILITY INFORMATION SHOWN ON THE DRAWINGS AND FOUND IN THE FIELD.

3. THE CONTRACTOR SHALL NOTIFY THE CITY ENGINEER AT LEAST FORTY-EIGHT (48) HOURS PRIOR TO WORK INVOLVING PUBLIC WATER OR SANITARY SEWER LINES.

4. CONTRACTOR SHALL BE RESPONSIBLE FOR ADJUSTING TO PROPER ALIGNMENT AND GRADE ALL MANHOLES, CLEANOUTS, VALVE BOXES, FIRE HYDRANTS, ETC. PRIOR TO AND AFTER THE PLACING OF FINAL GRADE AND/OR PAVEMENT. MANHOLE RIM ELEVATIONS SHALL BE INSTALLED FLUSH WITH FINISHED GRADE OR PAVEMENT.

5. PUBLIC WATER PIPE SHALL BE PVC AWWA C900, DR-14.

6. PUBLIC SANITARY SEWER PIPE SHALL BE PVC CONFORMING TO ASTM D3034-SDR26. UNLESS OTHERWISE NOTED, PRIVATE SANITARY SEWER SERVICE LATERALS SHALL BE 4"ø (MIN.) SCH. 40 PVC INSTALLED AT A MINIMUM SLOPE OF ONE PERCENT (1.0%).

7. PUBLIC SANITARY SEWER PIPE SHALL BE INSTALLED WITH A MINIMUM COVER OF 3'-6". PRIVATE SANITARY SEWER SERVICE LATERALS SHALL BE INSTALLED WITH A MINIMUM COVER OF 1'-0".

8. WATER LINES CROSSING STORM SEWER OR SANITARY SEWER LINES SHALL HAVE A MINIMUM VERTICAL SEPARATION CLEARANCE OF TWENTY-FOUR (24) INCHES. PARALLEL WATER LINES SHALL HAVE A MINIMUM HORIZONTAL SEPARATION CLEARANCE FROM SANITARY SEWER LINES OR MANHOLES OF NINE (9) FEET. WHERE MINIMUM CLEARANCE CANNOT BE ACHIEVED, THE SANITARY SEWER SHALL BE CONSTRUCTED WITH SDR-26, CLASS 160 PRESSURE PIPE, BUT IN NO CASE SHALL THE MINIMUM HORIZONTAL CLEARANCE OF PARALLEL LINES BE LESS THAN FOUR (4) FEET.

9. WATER METER VAULTS/BOXES SHALL BE FURNISHED AND INSTALLED IN A NON-PAVED AREA, WHERE POSSIBLE. INSTALL TRAFFIC-DUTY BOXES IN PAVED AREAS.

10. WATER AND SANITARY SEWER SERVICE LOCATIONS SHALL BE MARKED ON THE NEAREST CURB FACE OR EDGE OF PAVEMENT IF NON-CURBED STREET WITH A "W" AND "S", RESPECTIVELY. ALL VALVES SHALL BE MARKED WITH A "V". ALL LETTERS SHALL BE 3", STAMPED INTO THE CURB OR PAVEMENT, LOCATED DIRECTLY OVER THE SERVICE LINE AND PAINTED BLUE FOR WATER, GREEN FOR SANITARY SEWER AND RED FOR VALVES. IF THE VALVE IS IN THE PAVING, THE "V" SHALL BE MARKED UPRIGHT. IF THE VALVE IS OUTSIDE THE PAVING, THE "V" SHALL BE MARKED UPSIDE DOWN.

11. TESTING SHALL BE IN ACCORDANCE WITH SECTION 800 OF THE CITY OF KERRVILLE STANDARD SPECIFICATIONS AND CONTRACT DOCUMENTS, AND SHALL BE COORDINATED AND PAID FOR BY THE CONTRACTOR.

12. ALL AREAS AFFECTED OR DISTURBED DURING CONSTRUCTION SHALL BE RESTORED TO THEIR ORIGINAL CONDITION OR BETTER.

REINFORCED CONCRETE

1. ALL SITE WORK CONCRETE SHALL BE NORMAL WEIGHT, HAVE A MINIMUM 28-DAY COMPRESSIVE STRENGTH OF 4,000 PSI, SHALL HAVE A SLUMP BETWEEN 4" AND 6", SHALL HAVE A MAXIMUM COARSE AGGREGATE SIZE OF 1-1/4", SHALL HAVE A MAXIMUM PERMISSIBLE WATER-CEMENT RATIO OF 0.58 FOR NON-AIR-ENTRAINED CONCRETE AND 0.46 FOR AIR-ENTRAINED CONCRETE, AND SHALL CONFORM TO ASTM C94, "STANDARD SPECIFICATION FOR READY-MIXED CONCRETE".

2. CONCRETE SHALL BE BATCHED AND PLACED, AS APPLICABLE, ACCORDING TO ACI 306R, "COLD WEATHER CONCRETING", AND ACI 305R, "HOT WEATHER CONCRETING".

3. THE CONTRACTOR IS RESPONSIBLE FOR PROVIDING A MIX DESIGN THAT WILL PRODUCE A CONCRETE MEETING THE REQUIREMENTS OF THESE DRAWINGS AND SPECIFICATIONS, AS WELL AS FOR REJECTING CONCRETE ARRIVING AT THE SITE THAT DOES NOT.

4. PORTLAND CEMENT USED TO MAKE CONCRETE SHALL BE EITHER TYPE I, TYPE IA AIR ENTRAINING, TYPE I-II OR TYPE II CEMENT CONFORMING TO ASTM C150, "SPECIFICATION FOR PORTLAND CEMENT". FLY ASH MAY BE USED WHERE CONCRETE WILL NOT BE STAINED, PROVIDED THE FLY ASH CONSTITUTES NO MORE THAN 20% OF THE TOTAL WEIGHT OF THE CEMENTITIOUS MATERIALS. AGGREGATE SHALL CONFORM TO ASTM C33, "CONCRETE AGGREGATES".

5. THE ADDITION OF WATER TO THE CONCRETE AFTER LEAVING THE BATCH PLANT IS PROHIBITED. A WATER REDUCING AGENT CONFORMING TO ASTM C494, "SPECIFICATIONS FOR CHEMICAL ADMIXTURES FOR CONCRETE", MAY BE USED.

6. CALCIUM CHLORIDE OR ADMIXTURES CONTAINING CALCIUM CHLORIDE ARE PROHIBITED.

7. CONTRACTOR SHALL NOT PLACE CONCRETE WHEN IMPENDING WEATHER MAY RESULT IN RAINFALL OR LOW TEMPERATURES WHICH MIGHT IMPAIR THE QUALITY OF THE FINISHED WORK. IN NO CASE WILL CONCRETE BE PLACED WHEN THE SURROUNDING AIR TEMPERATURE IS LESS THAN 40°F. PROTECTION AND/OR HEAT MUST BE PROVIDED WHERE NECESSARY TO INSURE CONCRETE TEMPERATURES REMAIN ABOVE 50°F FOR AT SEVENTY-TWO (72) HOURS AFTER PLACEMENT AND ABOVE 40°F FOR AN ADDITIONAL SEVENTY-TWO (72) HOURS. THE CONTRACTOR SHALL HAVE ON SITE AND PROVIDE AMPLE COVERING TO PROTECT THE WORK IN CASE RAINFALL SHOULD OCCUR AFTER PLACING OPERATIONS HAVE BEGUN.

8. PLACING CONCRETE DURING EXTREME HOT WEATHER SHALL BE AVOIDED. WHERE NECESSARY TO PREVENT EXCESSIVE CONCRETE TEMPERATURE OR EVAPORATION OF WATER FROM CONCRETE DURING HOT WEATHER PLACEMENT, THE OPERATION SHALL BE SHIELDED FROM SUN IF POSSIBLE. COOLING OF MIX INGREDIENTS AND AN APPROVED RETARDING AGENT SHALL BE USED IN THE CONCRETE. THE MAXIMUM TEMPERATURE OF CONCRETE AT TRUCK DISCHARGE SHALL BE 95°F.

9. FROM THE TIME WATER IS ADDED INTO THE MIX AT THE PLANT, THE TRUCK DISCHARGE TIME SHALL NOT EXCEED THE FOLLOWING:

AIR TEMPERATURE	MAXIMUM DISCHARGE TIME
IN EXCESS OF 90°	60 MINUTES
70° TO 90°	90 MINUTES
LOWER THAN 70°	120 MINUTES

10. CONCRETE SHALL BE SAMPLED AND TESTED ACCORDING TO THE FOLLOWING:
    CYLINDERS (5 PER TEST, LABORATORY-CURED) – ASTM C31, C39 AND C192.
    SLUMP – ASTM C143.
    TEMPERATURE – ASTM C1064.

    TESTING SHALL BE PERFORMED AT A FREQUENCY OF ONCE EACH DAY BUT NOT LESS THAN ONCE PER EVERY 150 CUBIC YARDS PLACED OR EVERY 5,000 SQUARE FEET OF CONCRETE SURFACE, WHICHEVER YIELDS THE MOST TESTS. SAMPLES SHALL BE OBTAINED AND HANDLED IN ACCORDANCE WITH ASTM C172, "PRACTICE FOR SAMPLING FRESHLY MIXED CONCRETE".

11. CONTRACTOR SHALL MAINTAIN RECORDS OF CONCRETE PLACEMENT DATE, LOCATION, QUANTITY, TESTING AND BATCH TICKETS. BATCH TICKETS SHALL INCLUDE DATE, TRUCK NUMBER, CONTRACTOR'S NAME, PROJECT NAME, MIX DESIGN NUMBER, STRENGTH OF CONCRETE, QUANTITY, TIME WHEN BATCHED, TIME OF COMPLETION OF PLACEMENT AND THE SIGNATURE OF THE RECEIVER OF THE CONCRETE.

12. CONCRETE SHALL BE PLACED MONOLITHICALLY AND SHALL BE PROPERLY VIBRATED TO ELIMINATE "HONEY COMBING". UNLESS OTHERWISE SHOWN ON THE DRAWINGS, DO NOT ALLOW FORMATION OF COLD JOINTS.

13. UNLESS OTHERWISE NOTED ON THE DRAWINGS, CONCRETE SHALL BE FINISHED TO PROVIDE A FLATNESS OF 1/8" (MAX.) IN 10 FEET.

14. PROVIDE A TOOLED EDGE AT ALL EDGES OF EXPOSED CONCRETE, UNLESS NOTED OTHERWISE.

15. EXPANSION JOINTS IN CURBS SHALL BE INSTALLED AT A MAXIMUM SPACING OF 40'-0". INSTALL (1) #4x2'-0" SMOOTH DOWEL AT EACH CURB REINFORCING BAR (DISCONTINUOUS AT JOINT) CENTERED OVER JOINT. SLEEVE ONE END FOR 1/2" PLAY.

16. EXPANSION JOINT MATERIAL SHALL BE 1/2" ASPHALT IMPREGNATED FIBER BOARD OR REDWOOD, AND SHALL BE INSTALLED ACROSS THE FULL WIDTH OF THE CONCRETE SECTION. UNLESS SHOWN OTHERWISE ON THE DRAWINGS, INSTALL 1'-6" DOWELS CENTERED OVER EXPANSION JOINTS, ONE END SLEEVED FOR 1/2" PLAY, AT THE SAME LOCATION AND OF THE SAME SIZE AND NUMBER OF ADJACENT PARALLEL REINFORCING STEEL. PARALLEL REINFORCING STEEL SHALL BE DISCONTINUOUS ACROSS EXPANSION JOINTS. WHERE ADJACENT TO EXISTING CONCRETE, DRILL AND ADHESIVE ANCHOR DOWELS 4" INTO EXISTING CONCRETE.

17. CONTROL JOINTS IN CURBS SHALL BE INSTALLED AT A MAXIMUM SPACING OF 10'-0" USING A GROOVING TOOL TO A DEPTH OF 1/2" TO 3/4".

18. WHERE POSSIBLE, ALIGN CONTROL JOINTS AND EXPANSION JOINTS IN CURBS WITH CONTROL JOINTS AND EXPANSION JOINTS IN ADJACENT CONCRETE PAVEMENT OR FLATWORK.

19. FRONT FACE OF CURB SHALL BE FULLY FORMED FROM TOP OF CURB TO PAVEMENT SURFACE ELEVATION. BACK OF CURB SHALL BE FORMED A MINIMUM OF 6" DOWN FROM TOP OF CURB OR 6" BENEATH ADJACENT GRADE, WHICHEVER IS DEEPER. FORMS SHALL BE REMOVED THE SAME DAY CURB CONCRETE IS PLACED, AND CURBS SHALL BE PLASTERED WITH MORTAR OR BRUSHED TO A SMOOTH AND UNIFORM FINISH.

20. ADHESIVE ANCHORAGE OF EMBEDDED ITEMS IN CONCRETE, IF REQUIRED, SHALL BE WITH HILTI HVA ADHESIVE ANCHORAGE SYSTEM, POWERS POWER-FAST ADHESIVE ANCHORAGE SYSTEM, SIMPSON ACRYLIC-TIE ADHESIVE ANCHORAGE SYSTEM, OR ENGINEER-APPROVED EQUAL. INSTALL ACCORDING TO MANUFACTURER'S RECOMMENDATIONS.

21. JOINT SEALANT SHALL BE EUCOLASTIC II SEALANT BY THE EUCLID CHEMICAL COMPANY, OR ENGINEER-APPROVED EQUAL. INSTALL ACCORDING TO MANUFACTURER'S RECOMMENDATIONS.

22. ALL REINFORCING STEEL SHALL CONFORM TO ASTM A615, GRADE 60. UNLESS SPECIFICALLY CALLED FOR ON THE DRAWINGS, THE USE OF WELDED WIRE REINFORCEMENT (WWR) IS PROHIBITED. IF CALLED FOR, WWR SHALL BE FLAT SHEET (NOT ROLL) AND CONFORMING TO ASTM A185.

23. REINFORCING STEEL SHALL NOT BE BENT USING HEAT.

24. PROVIDE STEEL OR PLASTIC CHAIRS OR BOLSTER SUPPORTS AS NEEDED TO HOLD REINFORCING STEEL AT DESIGN LOCATIONS WITHOUT SAG OR DISPLACEMENT DURING PLACEMENT OF CONCRETE.

25. UNLESS OTHERWISE SHOWN ON THE DRAWINGS, MAINTAIN THE FOLLOWING CLEAR COVER FROM FACE OF CONCRETE TO CLOSEST EDGE OF REINFORCING STEEL:
    25.1. CONCRETE CAST AGAINST AND PERMANENTLY EXPOSED TO EARTH, 3" (EXCEPT SINGLE MATS OF STEEL IN PAVING OR FLATWORK SHALL BE CENTERED WITHIN THE THICKNESS OF THE SLAB.)
    25.2. CONCRETE EXPOSED TO EARTH OR WEATHER, 1½"

26. MINIMUM LAP SPLICES SHALL BE AS FOLLOWS:

BAR SIZE	MIN. LAP SPLICE
3	1'-5"
4	1'-11"

27. UNLESS OTHERWISE SHOWN ON THE DRAWINGS, ENDS OF ALL REINFORCING BARS AT INTERSECTING ENDS OF CONCRETE BEAMS OR FOOTINGS SHALL BE PROVIDED WITH STANDARD HOOKS OR NINETY-DEGREE CORNER BARS. CORNER BARS SHALL BE OF THE SAME SIZE, NUMBER AND LOCATION AS THE PRIMARY BEAM REINFORCING STEEL. CORNER BARS SHALL BE LAPPED A MINIMUM OF 2'-0" WITH PRIMARY BEAM REINFORCING STEEL.

28. CONCRETE SHALL BE COMPLETELY COVERED AND CURED USING A CURING COMPOUND MEETING THE REQUIREMENTS OF ASTM C309, "LIQUID MEMBRANE-FORMING COMPOUNDS FOR CURING CONCRETE", COTTON OR BURLAP BLANKETS, OR POLYETHYLENE SHEETING, AND KEPT CONTINUOUSLY MOIST FOR AT LEAST 7 DAYS. CURING COMPOUNDS SHALL BE APPLIED ACCORDING TO MANUFACTURER'S RECOMMENDATIONS.

29. COORDINATE CONCRETE FINISHES WITH ARCHITECT AND OWNER. UNLESS OTHERWISE NOTED ON THE DRAWINGS, CONCRETE SURFACES SHALL BE FLOATED AND TROWELED TO A UNIFORM SMOOTH SURFACE, THEN FINISHED WITH A CAMEL HAIR BRUSH OR WOOD FLOAT TO A GRITTY TEXTURE.

CITY APPROVAL

These plans have been reviewed and approved by Kyle Burow on 10/31/16 Date

This approval will become void after one year of the indicated approval date. Exceptions to this approval are as followed

By approving these plans, the City of Kerrville does not assume any liability for engineering design nor does approval release the design engineer from liability for correction errors or omission in the design both during and after construction.

REVISIONS

ITEM/DATE/DESCRIPTION

Hewitt Engineering Inc.
Consulting Engineering Services
716 Barnett Street • Kerrville, Texas 78028 • 830.315.8800
TBPE Registration No. F-10739 • www.hewitt-inc.com

PETER LEWIS
ARCHITECT + ASSOCIATES
334 West Water Street Kerrville, TX 78028
(830) 896-4220 Fax (830) 896-4226
www.pwlarchitect.com

STATE OF TEXAS
JOHN M. HEWITT
66142
LICENSED PROFESSIONAL ENGINEER
10/21/16

CITY OF KERRVILLE TEXAS 1889

City of Kerrville Athletic Complex Field House

Kerrville, Texas

NOT PUBLISHED. ALL RIGHTS RESERVED BY ARCHITECT. DRAWINGS AND SPECIFICATIONS AS INSTRUMENTS OF SERVICE ARE AND SHALL REMAIN THE PROPERTY OF THE ARCHITECT. THEY SHALL NOT BE USED ON OTHER PROJECTS OR EXTENSIONS TO THIS PROJECT EXCEPT BY AGREEMENT IN WRITING AND WITH APPROPRIATE COMPENSATION TO THE ARCHITECT. CONTRACTOR IS RESPONSIBLE FOR CONFIRMING AND CORRELATING DIMENSIONS AT JOB SITE. THE ARCHITECT WILL NOT BE RESPONSIBLE FOR CONSTRUCTION MEANS, METHODS, TECHNIQUES, SEQUENCES OR FOR SAFETY PRECAUTIONS AND PROGRAMS IN CONNECTION WITH THE PROJECT.

PROJECT NO. DATE
10/21/16

GENERAL NOTES

SHEET NUMBER
C2

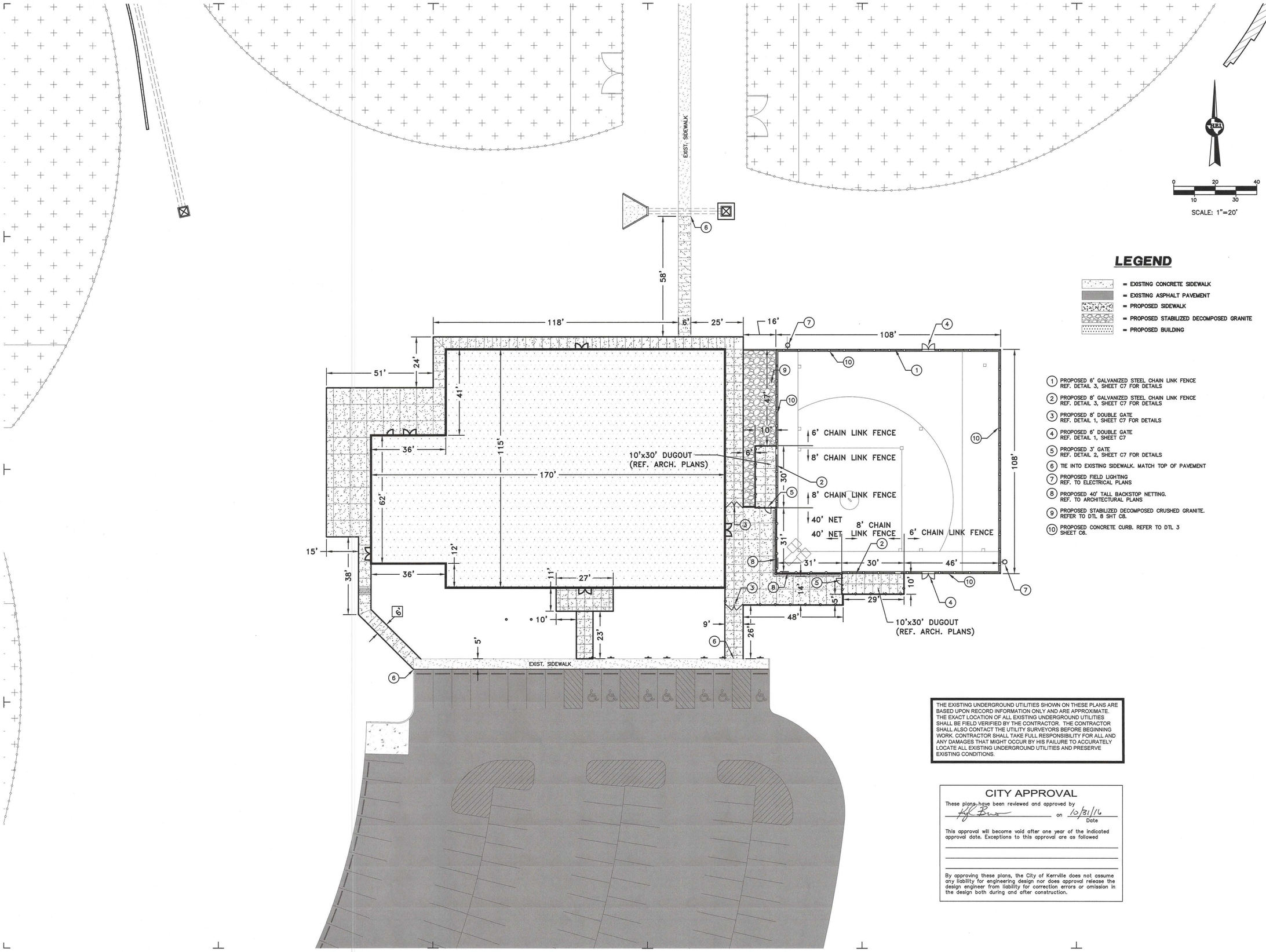

LEGEND

- = EXISTING CONCRETE SIDEWALK
- = EXISTING ASPHALT PAVEMENT
- = PROPOSED SIDEWALK
- = PROPOSED STABILIZED DECOMPOSED GRANITE
- = PROPOSED BUILDING

1. PROPOSED 6' GALVANIZED STEEL CHAIN LINK FENCE REF. DETAIL 3, SHEET C7 FOR DETAILS
2. PROPOSED 8' GALVANIZED STEEL CHAIN LINK FENCE REF. DETAIL 3, SHEET C7 FOR DETAILS
3. PROPOSED 8' DOUBLE GATE REF. DETAIL 1, SHEET C7 FOR DETAILS
4. PROPOSED 6' DOUBLE GATE REF. DETAIL 1, SHEET C7
5. PROPOSED 3' GATE REF. DETAIL 2, SHEET C7 FOR DETAILS
6. TIE INTO EXISTING SIDEWALK. MATCH TOP OF PAVEMENT
7. PROPOSED FIELD LIGHTING REF. TO ELECTRICAL PLANS
8. PROPOSED 40' TALL BACKSTOP NETTING. REF. TO ARCHITECTURAL PLANS
9. PROPOSED STABILIZED DECOMPOSED CRUSHED GRANITE. REFER TO DTL 8 SHT C8.
10. PROPOSED CONCRETE CURB. REFER TO DTL 3 SHEET C8.

THE EXISTING UNDERGROUND UTILITIES SHOWN ON THESE PLANS ARE BASED UPON RECORD INFORMATION ONLY AND ARE APPROXIMATE. THE EXACT LOCATION OF ALL EXISTING UNDERGROUND UTILITIES SHALL BE FIELD VERIFIED BY THE CONTRACTOR. THE CONTRACTOR SHALL ALSO CONTACT THE UTILITY SURVEYORS BEFORE BEGINNING WORK. CONTRACTOR SHALL TAKE FULL RESPONSIBILITY FOR ALL AND ANY DAMAGES THAT MIGHT OCCUR BY HIS FAILURE TO ACCURATELY LOCATE ALL EXISTING UNDERGROUND UTILITIES AND PRESERVE EXISTING CONDITIONS.

CITY APPROVAL

These plans have been reviewed and approved by

_____ on 10/31/16
Date

This approval will become void after one year of the indicated approval date. Exceptions to this approval are as followed

_____

_____

_____

By approving these plans, the City of Kerrville does not assume any liability for engineering design nor does approval release the design engineer from liability for correction errors or omission in the design both during and after construction.

REVISIONS

ITEM/DATE/DESCRIPTION

Hewitt Engineering Inc.
Consulting Engineering Services
716 Barnett Street ◆ Kerrville, Texas 78028 ◆ 830.315.8800
TBPE Registration No. F-10739 ◆ www.hewitt-inc.com

PETER LEWIS
ARCHITECT + ASSOCIATES
334 West Water Street Kerrville, TX 78028
(830) 896-4220 Fax (830) 896-4226
www.pwlarchitect.com

STATE OF TEXAS
JOHN M. HEWITT
66142
LICENSED
PROFESSIONAL ENGINEER
10/28/16

CITY OF KERRVILLE 1889 TEXAS

City of Kerrville Athletic Complex Field House

Kerrville, Texas

NOT PUBLISHED. ALL RIGHTS RESERVED BY ARCHITECT. DRAWINGS AND SPECIFICATIONS AS INSTRUMENTS OF SERVICE ARE AND SHALL REMAIN THE PROPERTY OF THE ARCHITECT. THEY SHALL NOT BE USED BY ANY PERSON FOR ANY PURPOSE OTHER THAN THE PROJECT, EXCEPT BY AGREEMENT IN WRITING AND WITH APPROPRIATE COMPENSATION TO THE ARCHITECT. CONTRACTOR IS RESPONSIBLE FOR CONFIRMING AND CORRELATING DIMENSIONS AT JOB SITE. THE ARCHITECT WILL NOT BE RESPONSIBLE FOR CONSTRUCTION MEANS, METHODS, TECHNIQUES, SEQUENCES OR FOR SAFETY PRECAUTIONS AND PROGRAMS IN CONNECTION WITH THE PROJECT.

PROJECT NO. DATE

10/28/16

DIMENSIONAL CONTROL PLAN

SHEET NUMBER

C3

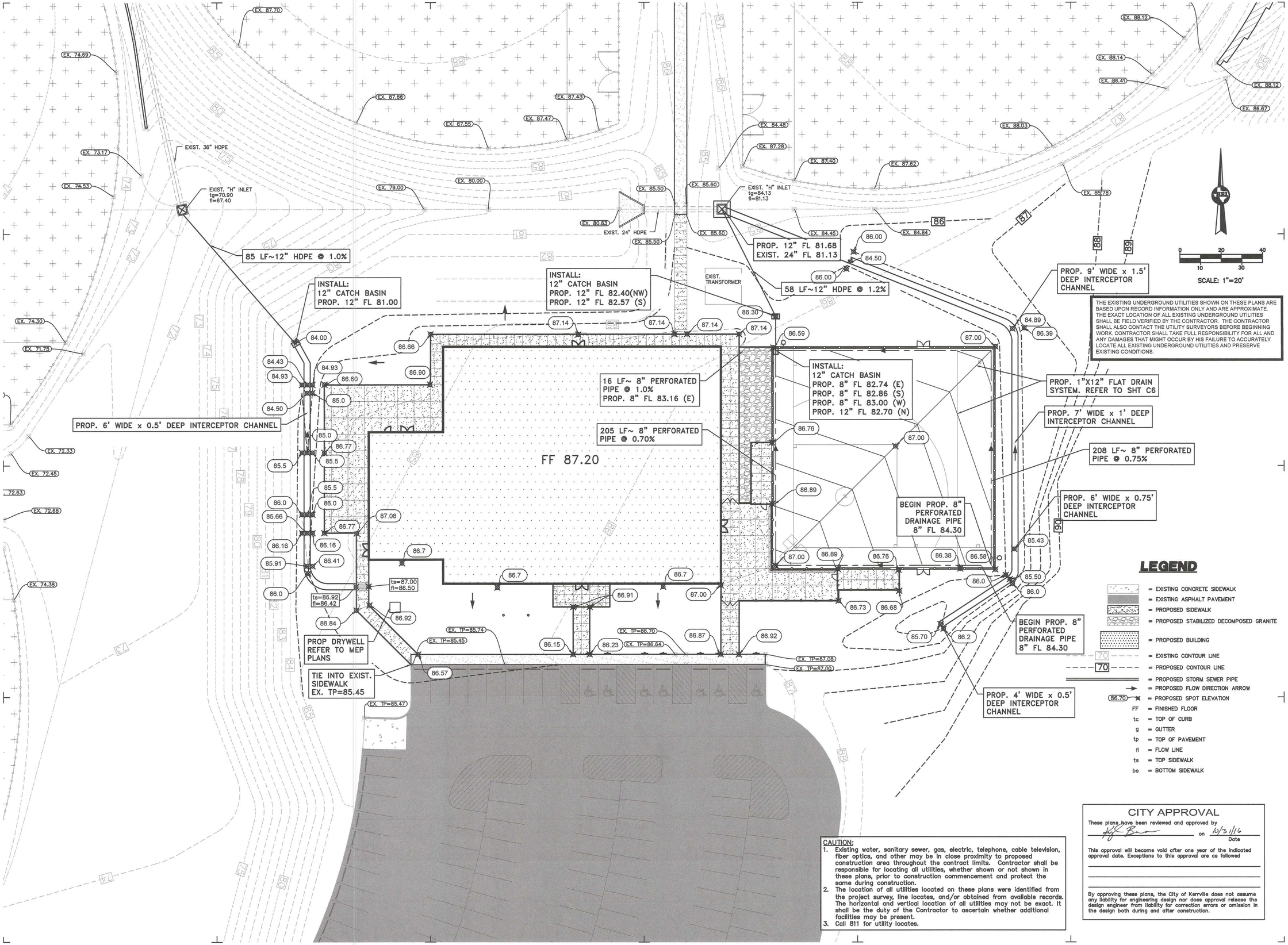

LEGEND

- = EXISTING CONCRETE SIDEWALK
- = EXISTING ASPHALT PAVEMENT
- = PROPOSED SIDEWALK
- = PROPOSED STABILIZED DECOMPOSED GRANITE
- = PROPOSED BUILDING
- 70 = EXISTING CONTOUR LINE
- 70 = PROPOSED CONTOUR LINE
- = PROPOSED STORM SEWER PIPE
- = PROPOSED FLOW DIRECTION ARROW
- 86.70 = PROPOSED SPOT ELEVATION
- FF = FINISHED FLOOR
- tc = TOP OF CURB
- g = GUTTER
- tp = TOP OF PAVEMENT
- fl = FLOW LINE
- ts = TOP SIDEWALK
- bs = BOTTOM SIDEWALK

CAUTION:

1. Existing water, sanitary sewer, gas, electric, telephone, cable television, fiber optics, and other may be in close proximity to proposed construction area throughout the contract limits. Contractor shall be responsible for locating all utilities, whether shown or not shown in these plans, prior to construction commencement and protect the same during construction.
2. The location of all utilities located on these plans were identified from the project survey, line locates, and/or obtained from available records. The horizontal and vertical location of all utilities may not be exact. It shall be the duty of the Contractor to ascertain whether additional facilities may be present.
3. Call 811 for utility locates.

CITY APPROVAL

These plans have been reviewed and approved by _____ on 10/31/16 (Date)

This approval will become void after one year of the indicated approval date. Exceptions to this approval are as followed

By approving these plans, the City of Kerrville does not assume any liability for engineering design nor does approval release the design engineer from liability for correction errors or omission in the design both during and after construction.

REVISIONS

ITEM/DATE/DESCRIPTION

Hewitt Engineering Inc.
Consulting Engineering Services
716 Barnett Street ◆ Kerrville, Texas 78028 ◆ 830.315.8800
TBPE Registration No. F-10739 ◆ www.hewitt-inc.com

PETER LEWIS
ARCHITECT + ASSOCIATES
334 West Water Street Kerrville, TX 78028
(830) 896-4220 Fax (830) 896-4226
www.pwlarchitect.com

STATE OF TEXAS
JOHN M. HEWITT
66142
LICENSED
PROFESSIONAL ENGINEER
10/28/16

CITY OF KERRVILLE 1889 TEXAS

City of Kerrville Athletic Complex Field House

Kerrville, Texas

NOT PUBLISHED. ALL RIGHTS RESERVED BY ARCHITECT. DRAWINGS AND SPECIFICATIONS AS INSTRUMENTS OF SERVICE ARE AND SHALL REMAIN THE PROPERTY OF THE ARCHITECT. THEY SHALL NOT BE USED ON OTHER PROJECTS OR EXTENSIONS TO THIS PROJECT EXCEPT BY AGREEMENT IN WRITING AND WITH APPROPRIATE COMPENSATION TO THE ARCHITECT. CONTRACTOR SHALL VERIFY ALL FIGURES AND CONDITIONS AT JOB SITE. THE ARCHITECT WILL NOT BE RESPONSIBLE FOR CONSTRUCTION MEANS, METHODS, TECHNIQUES, SEQUENCES OR FOR SAFETY PRECAUTIONS AND PROGRAMS IN CONNECTION WITH THE PROJECT.

PROJECT NO. DATE

10/28/16

GRADING, DRAINAGE & PAVING PLAN

SHEET NUMBER

C4

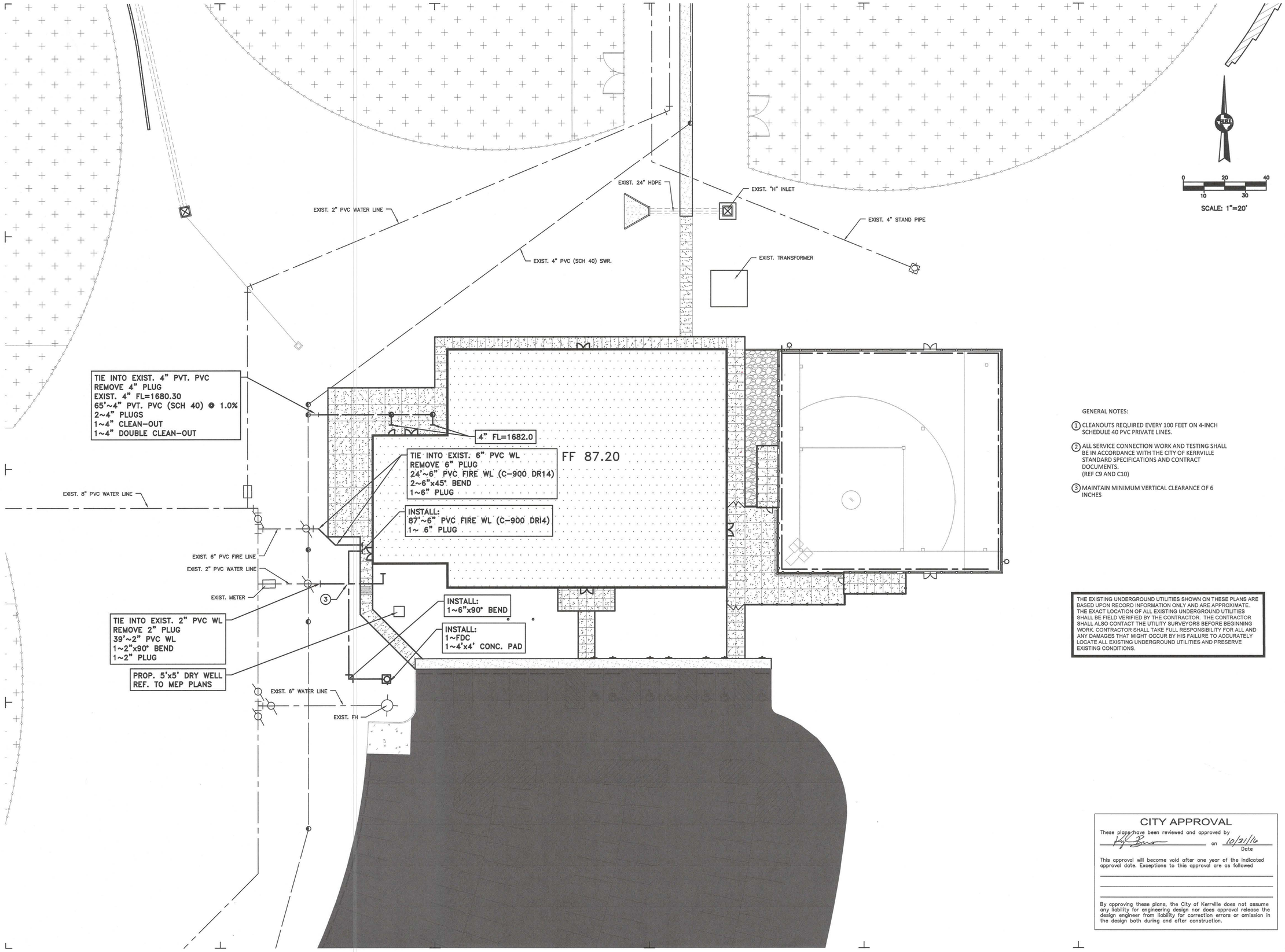

GENERAL NOTES:

1. CLEANOUTS REQUIRED EVERY 100 FEET ON 4-INCH SCHEDULE 40 PVC PRIVATE LINES.
2. ALL SERVICE CONNECTION WORK AND TESTING SHALL BE IN ACCORDANCE WITH THE CITY OF KERRVILLE STANDARD SPECIFICATIONS AND CONTRACT DOCUMENTS. (REF C9 AND C10)
3. MAINTAIN MINIMUM VERTICAL CLEARANCE OF 6 INCHES

THE EXISTING UNDERGROUND UTILITIES SHOWN ON THESE PLANS ARE BASED UPON RECORD INFORMATION ONLY AND ARE APPROXIMATE. THE EXACT LOCATION OF ALL EXISTING UNDERGROUND UTILITIES SHALL BE FIELD VERIFIED BY THE CONTRACTOR. THE CONTRACTOR SHALL ALSO CONTACT THE UTILITY SURVEYORS BEFORE BEGINNING WORK. CONTRACTOR SHALL TAKE FULL RESPONSIBILITY FOR ALL AND ANY DAMAGES THAT MIGHT OCCUR BY HIS FAILURE TO ACCURATELY LOCATE ALL EXISTING UNDERGROUND UTILITIES AND PRESERVE EXISTING CONDITIONS.

CITY APPROVAL

These plans have been reviewed and approved by _____ on 10/21/16 (Date)

This approval will become void after one year of the indicated approval date. Exceptions to this approval are as followed

By approving these plans, the City of Kerrville does not assume any liability for engineering design nor does approval release the design engineer from liability for correction errors or omission in the design both during and after construction.

REVISIONS

ITEM/DATE/DESCRIPTION

Hewitt Engineering Inc.
Consulting Engineering Services
716 Barnett Street • Kerrville, Texas 78028 • 830.315.8800
TBPE Registration No. F-10739 • www.hewitt-inc.com

PETER LEWIS
ARCHITECT + ASSOCIATES
334 West Water Street Kerrville, TX 78028
(830) 896-4220 Fax (830) 896-4226
www.pwlarchitect.com

STATE OF TEXAS
JOHN M. HEWITT
66142
LICENSED
PROFESSIONAL ENGINEER
10/21/16

CITY OF KERRVILLE 1889 TEXAS

City of Kerrville Athletic Complex Field House

Kerrville, Texas

NOT PUBLISHED. ALL RIGHTS RESERVED BY ARCHITECT. DRAWINGS AND SPECIFICATIONS AS INSTRUMENTS OF SERVICE ARE AND SHALL REMAIN THE PROPERTY OF THE ARCHITECT. THEY SHALL NOT BE USED BY ANY PERSON FOR ANY PURPOSE OTHER THAN THE PROJECT, EXCEPT BY AGREEMENT IN WRITING AND WITH APPROPRIATE COMPENSATION TO THE ARCHITECT. CONTRACTOR IS RESPONSIBLE FOR CONFIRMING AND CORRELATING DIMENSIONS AT JOB SITE. THE ARCHITECT WILL NOT BE RESPONSIBLE FOR CONSTRUCTION MEANS, METHODS, TECHNIQUES, SEQUENCE OR FOR SAFETY PRECAUTIONS AND PROGRAMS IN CONNECTION WITH THE PROJECT.

PROJECT NO. DATE

10/21/16

UTILITY PLAN

SHEET NUMBER

C5

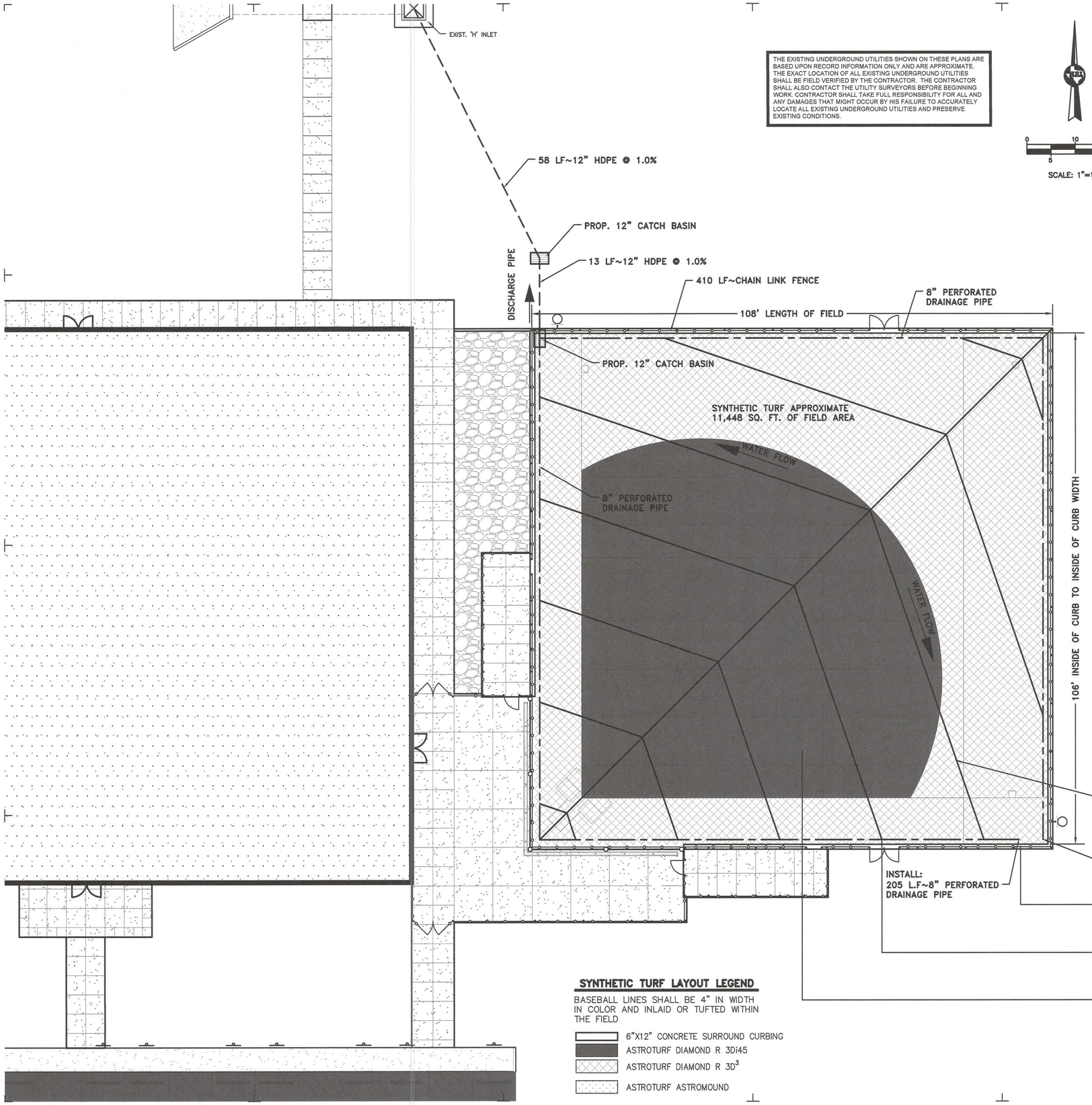

THE EXISTING UNDERGROUND UTILITIES SHOWN ON THESE PLANS ARE BASED UPON RECORD INFORMATION ONLY AND ARE APPROXIMATE. THE EXACT LOCATION OF ALL EXISTING UNDERGROUND UTILITIES SHALL BE FIELD VERIFIED BY THE CONTRACTOR. THE CONTRACTOR SHALL ALSO CONTACT THE UTILITY SURVEYORS BEFORE BEGINNING WORK. CONTRACTOR SHALL TAKE FULL RESPONSIBILITY FOR ALL AND ANY DAMAGES THAT MIGHT OCCUR BY HIS FAILURE TO ACCURATELY LOCATE ALL EXISTING UNDERGROUND UTILITIES AND PRESERVE EXISTING CONDITIONS.

0 10 20
5 15
SCALE: 1"=10'

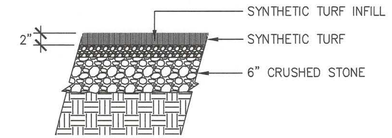

1 / C6 SYNTHETIC TURF DETAIL
NTS

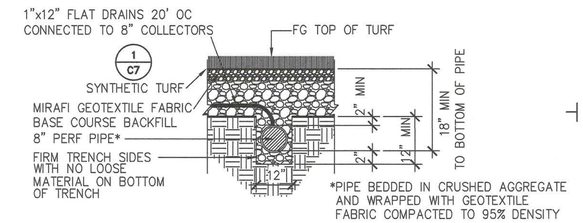

2 / C6 FIELD UNDERDRAIN
NTS

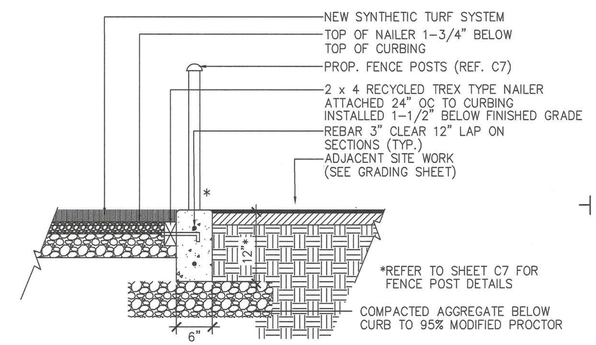

3 / C6 COMPACTED AGGREGATE BELOW
NTS

GENERAL NOTES

1. BASEBALL LINES AND MARKINGS SHALL BE WHITE IN COLOR AND 4" WIDTH.
2. ALL MARKINGS, LINES SHALL BE TUFTED OR INLAID ON THE FIELD.
3. ALL COLORS SHALL BE APPROVED BY THE OWNER PRIOR TO MANUFACTURE OF TURF PRODUCT.
4. HOME, FIRST, SECOND AND THIRD FOR ALL 90° BASES SHALL BE THE SAME ELEVATION IN GRADE.
5. SLOPES SHALL NOT EXCEED 0.5% SLOPE IN ANY DIRECTION.
6. ELECTRICAL LIGHTING CONDUIT AND CONDUCTORS SHALL BE KEPT OUT FROM UNDER THE SYNTHETIC TURF FIELD.
7. PROVIDE TWO PITCHERS RUBBERS. COORDINATE WITH CITY STAFF FOR FINAL LOCATIONS.

SYNTHETIC TURF LAYOUT LEGEND

BASEBALL LINES SHALL BE 4" IN WIDTH IN COLOR AND INLAID OR TUFTED WITHIN THE FIELD

- 6"X12" CONCRETE SURROUND CURBING
- ASTROTURF DIAMOND R 3Di45
- ASTROTURF DIAMOND R 3D^3
- ASTROTURF ASTROMOUND

CITY APPROVAL

These plans have been reviewed and approved by _____ on 10/31/16 (Date)

This approval will become void after one year of the indicated approval date. Exceptions to this approval are as followed

By approving these plans, the City of Kerrville does not assume any liability for engineering design nor does approval release the design engineer from liability for correction errors or omission in the design both during and after construction.

REVISIONS

ITEM/DATE/DESCRIPTION

Hewitt Engineering Inc.
Consulting Engineering Services
716 Barnett Street ◆ Kerrville, Texas 78028 ◆ 830.315.8800
TBPE Registration No. F-10739 ◆ www.hewitt-inc.com

PETER LEWIS
ARCHITECT + ASSOCIATES
334 West Water Street Kerrville, TX 78028
(830) 896-4220 Fax (830) 896-4226
www.pwlarchitect.com

STATE OF TEXAS
JOHN M. HEWITT
66142
LICENSED
PROFESSIONAL ENGINEER
10/21/16

CITY OF KERRVILLE 1889 TEXAS

City of Kerrville Athletic Complex Field House

Kerrville, Texas

NOT PUBLISHED. ALL RIGHTS RESERVED BY ARCHITECT. DRAWINGS AND SPECIFICATIONS AS INSTRUMENTS OF SERVICE ARE AND SHALL REMAIN THE PROPERTY OF THE ARCHITECT. THEY SHALL NOT BE USED ON OTHER PROJECTS OR EXTENSIONS TO THIS PROJECT EXCEPT BY AGREEMENT IN WRITING AND WITH APPROPRIATE COMPENSATION TO THE ARCHITECT. CONTRACTOR IS RESPONSIBLE FOR CONFIRMING AND CORRELATING DIMENSIONS AT JOB SITE. THE ARCHITECT WILL NOT BE RESPONSIBLE FOR CONSTRUCTION MEANS, METHODS, TECHNIQUES, SEQUENCES OR FOR SAFETY PRECAUTIONS AND PROGRAMS IN CONNECTION WITH THE PROJECT.

PROJECT NO. DATE
10/21/16

FIELD LAYOUT

SHEET NUMBER
C6

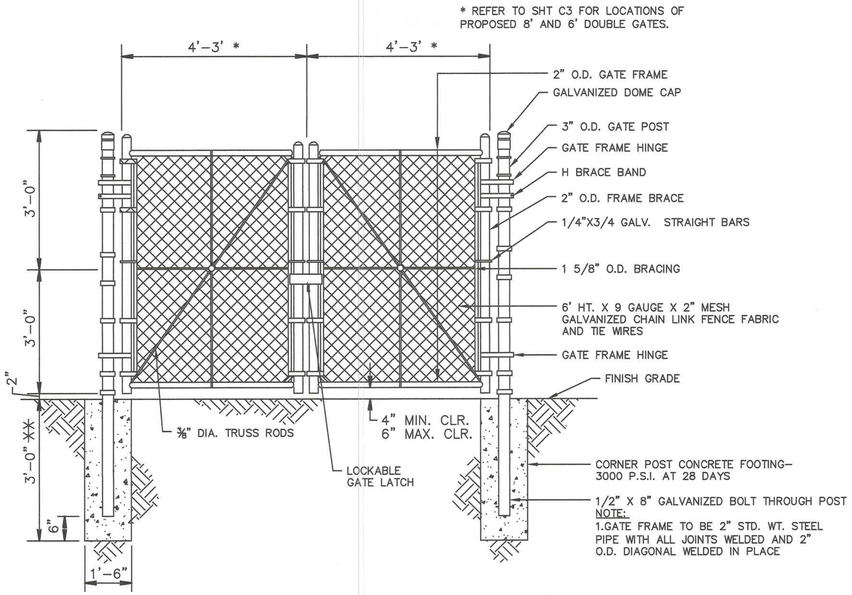

1 / C7 **8'-6' WIDE DOUBLE GATE**

N.T.S.

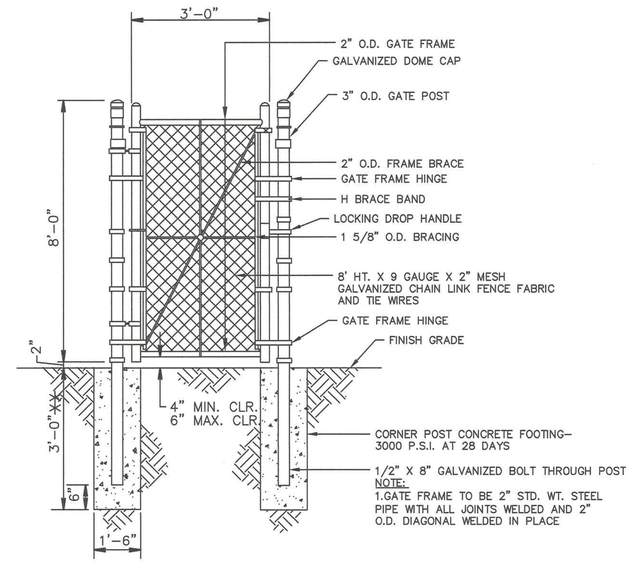

2 / C7 **3'-0" WIDE CHAIN LINK FENCE GATE**

N.T.S.

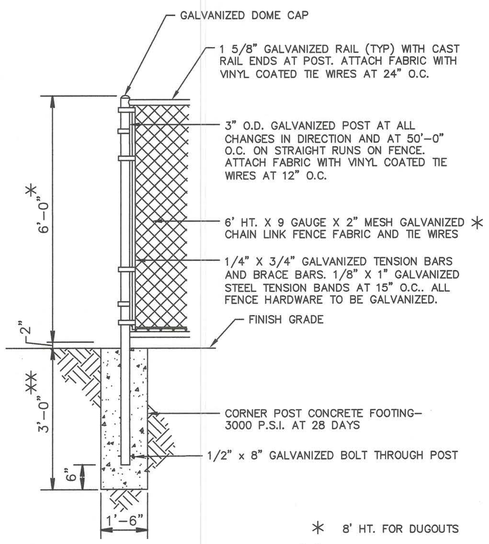

3 / C7 **CHAIN LINK CORNER POST**

N.T.S.

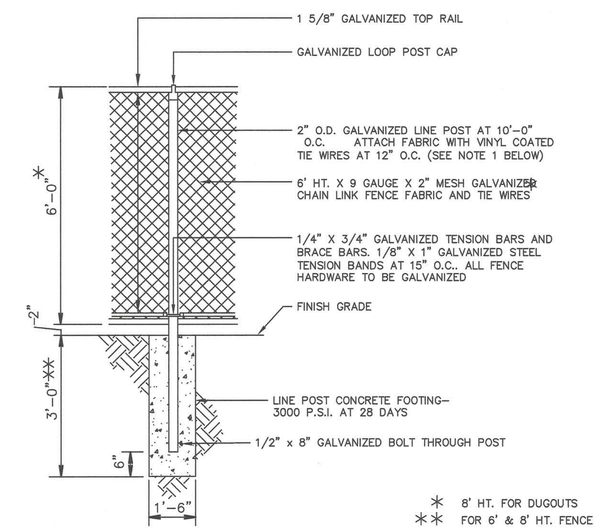

NOTE 1: USE 2 1/2" O.D. GALVANIZED LINE POSTS AT 8'-0" O.C. FOR ALL OUTFIELD FENCING.

4 / C7 **CHAIN LINK LINE POST**

N.T.S.

CITY APPROVAL

These plans have been reviewed and approved by

_____ on 10/31/16
Date

This approval will become void after one year of the indicated approval date. Exceptions to this approval are as followed

By approving these plans, the City of Kerrville does not assume any liability for engineering design nor does approval release the design engineer from liability for correction errors or omission in the design both during and after construction.

REVISIONS

ITEM/DATE/DESCRIPTION

Hewitt Engineering Inc.
Consulting Engineering Services
716 Barnett Street ◆ Kerrville, Texas 78028 ◆ 830.315.8800
TBPE Registration No. F-10720 ◆ www.hewitt-inc.com

PETER LEWIS
ARCHITECT + ASSOCIATES
334 West Water Street Kerrville, TX 78028
(830) 896-4220 Fax (830) 896-4226
www.pwlarchitect.com

STATE OF TEXAS
JOHN M. HEWITT
66142
LICENSED
PROFESSIONAL ENGINEER
10/28/16

CITY OF KERRVILLE 1889 TEXAS

City of Kerrville Athletic Complex Field House

Kerrville, Texas

NOT PUBLISHED. ALL RIGHTS RESERVED BY ARCHITECT. DRAWINGS AND SPECIFICATIONS AS INSTRUMENTS OF SERVICE ARE AND SHALL REMAIN THE PROPERTY OF THE ARCHITECT. THEY ARE NOT TO BE USED ON OTHER PROJECTS OR EXTENSIONS TO THIS PROJECT EXCEPT BY AGREEMENT IN WRITING AND WITH APPROPRIATE COMPENSATION TO THE ARCHITECT. CONTRACTOR IS RESPONSIBLE FOR CONFIRMING AND CORRELATING DIMENSIONS, QUANTITIES AND DETAILS. ARCHITECT WILL NOT BE RESPONSIBLE FOR CONSTRUCTION MEANS, METHODS, TECHNIQUES, SEQUENCES OR FOR SAFETY PRECAUTIONS AND PROGRAMS IN CONNECTION WITH THE PROJECT.

PROJECT NO. DATE

10/28/16

FENCE DETAILS

SHEET NUMBER

C7

NOTE:
NO BACK ROD ON CONSTRUCTION JOINT.

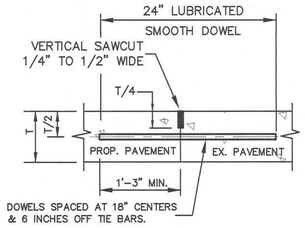

NOTES:
1. FOR T = 6" USE NO. 4 DOWELS
   T > 6" USE NO. 6 DOWELS
2. DOWELS & REINFORCEMENT SHALL BE SUPPORTED BY AN APPROVED DEVICE.
3. LONGITUDINAL BUTT JOINT MAY BE UTILIZED IN PLACE OF KEYWAY JOINT AT CONTRACTORS OPTION.
4. DOWEL BARS SHALL BE DRILLED INTO PAVEMENT HORIZONTALLY BY USE OF A MECHANICAL RIG & EXPOXIED IN PLACE. DRILLING BY HAND IS NOT ACCEPTABLE, PUSHING DOWEL BARS INTO GREEN CONCRETE IS NOTE ACCEPTABLE.

1 / C8 LONGITUDINAL BUTT JOINT
NTS

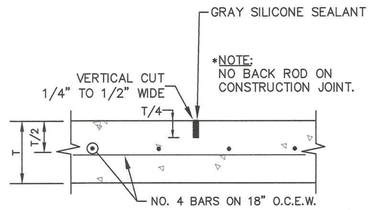

2 / C8 CONTRACTION / SAWED DUMMY JOINT
NTS

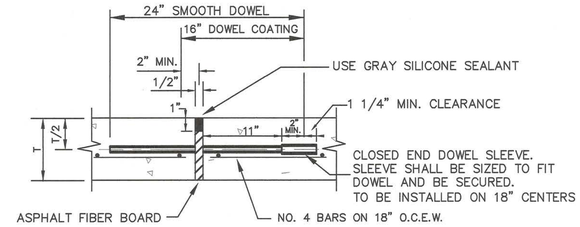

3 / C8 EXPANSION JOINT - CONC. PVMT.
NTS

NOTES:
1. FOR T = 6", USE NO. 4 DOWELS
   T > 6", USE NO. 6 DOWELS
DOWELS & REINFORCEMENT SHALL BE SUPPORTED BY AN APPROVED DEVICE.
2. EXPANSION JOINTS SHALL NOT EXCEED 1" IN WIDTH.

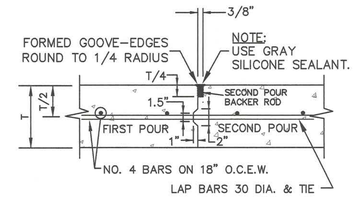

4 / C8 CONSTRUCTION JOINT
NTS

NOTE:
CONTRACOR SHALL PROTECT KEYWAY PRIOR TO SECOND POUR. IF KEYWAY IS DAMAGED, CONTRACTOR SHALL REPAIR WITH THE USE OF LONGITUDINAL BUTT JOINT. DRILL DOWELS INTO FIRST POUR.

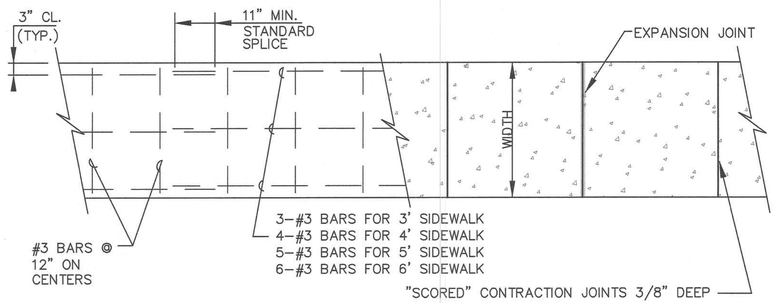

5 / C8 SIDEWALK AND STEEL REINFORCING
NTS

Note:
Provide Toe-Down
When Abutting
Pavement, Curb &
Gutter.

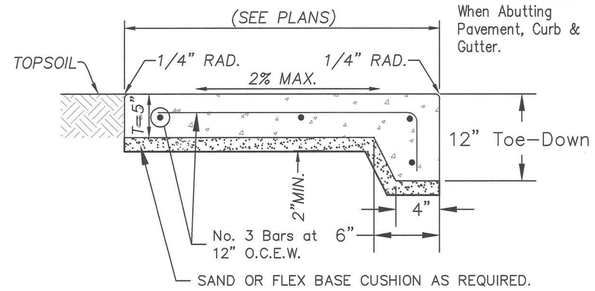

6 / C8 TYPICAL CONCRETE SIDEWALK SECTION
NTS

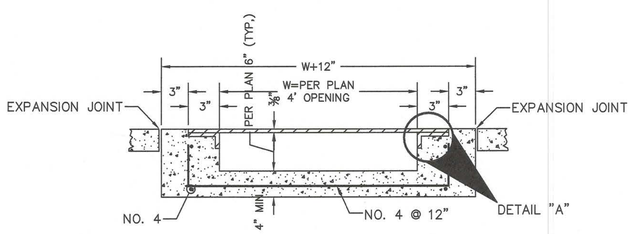

SECTION A-A

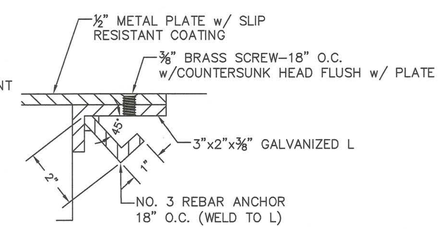

DETAIL "A"

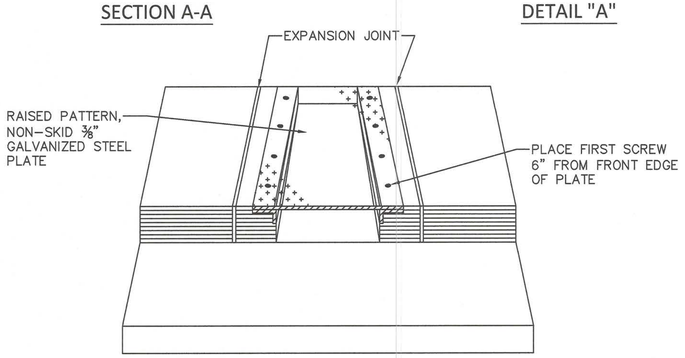

7 / C8 SIDEWALK COVERED FLUME
NTS

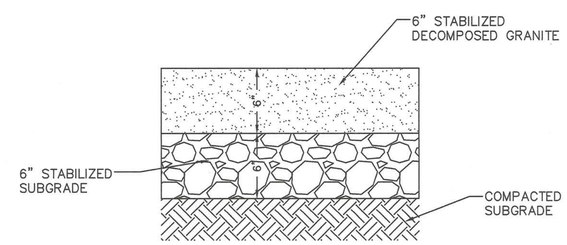

8 / C8 STABILIZED DECOMPOSED GRANITE
NTS

CITY APPROVAL

These plans have been reviewed and approved by _____ on 10/31/16
Date

This approval will become void after one year of the indicated approval date. Exceptions to this approval are as followed

By approving these plans, the City of Kerrville does not assume any liability for engineering design nor does approval release the design engineer from liability for correction errors or omission in the design both during and after construction.

REVISIONS

ITEM/DATE/DESCRIPTION

Hewitt Engineering Inc.
Consulting Engineering Services
716 Barnett Street ◆ Kerrville, Texas 78028 ◆ 830.315.8800
TBPE Registration No. F-10739 ◆ www.hewitt-inc.com

PETER LEWIS
ARCHITECT + ASSOCIATES
334 West Water Street Kerrville, TX 78028
(830) 896-4220 Fax (830) 896-4226
www.pwlarchitect.com

STATE OF TEXAS
JOHN M. HEWITT
66142
LICENSED
PROFESSIONAL ENGINEER
10/21/16

CITY OF KERRVILLE
1889
TEXAS

City of Kerrville Athletic Complex Field House

Kerrville, Texas

NOT PUBLISHED. ALL RIGHTS RESERVED BY ARCHITECT. DRAWINGS AND SPECIFICATIONS AS INSTRUMENTS OF SERVICE ARE AND SHALL REMAIN THE PROPERTY OF THE ARCHITECT. THEY SHALL NOT BE USED ON OTHER PROJECTS OR EXTENSIONS TO THIS PROJECT EXCEPT BY AGREEMENT IN WRITING AND WITH APPROPRIATE COMPENSATION TO THE ARCHITECT. CONTRACTOR IS RESPONSIBLE FOR COORDINATION OF ALL DRAWINGS AND SITE WORK. ARCHITECT WILL NOT BE RESPONSIBLE FOR CONSTRUCTION MEANS, METHODS, TECHNIQUES, SEQUENCES OR FOR SAFETY PRECAUTIONS AND PROGRAMS IN CONNECTION WITH THE PROJECT.

PROJECT NO. | DATE
10/21/16

PAVING DETAILS

SHEET NUMBER
C8

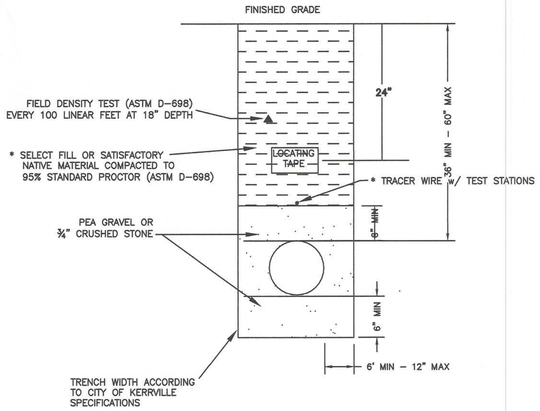

NOTES:

* MOISTURE SENSITIVE MATERIAL COMPACTED TO 95% STANDARD PROCTOR AND WITHIN 3% (+/-) OF OPTIMUM MOISTURE CONTENT MAY BE USED WHERE WATER LINE IS NOT UNDERNEATH PAVEMENT.

* PROVIDE SEPARATE TRACER WIRE FOR IRRIGATION LINE DIFFERENT FROM WATER LINE TRACER WIRE.

▲ REPRESENTS FIELD DENSITY TEST LOCATION

INSTALLATION OF PIPE TO FOLLOW CITY OF KERRVILLE SUBDIVISION SPECIFICATIONS

1 / C9 WATER LINE EMBEDMENT & FIELD DENSITY TESTING

NTS

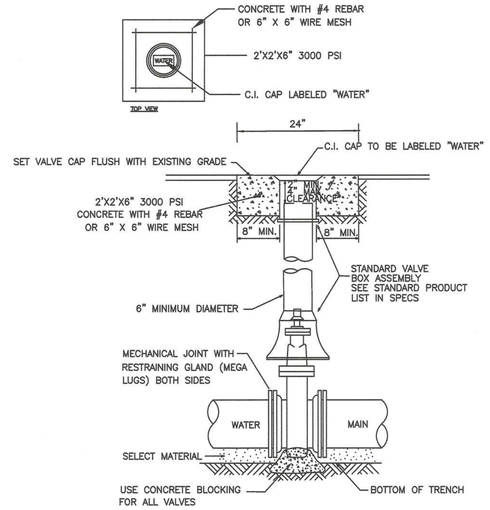

NOTE: ALL FLUSHING AND GATE VALVES TO BE AWWA STANDARD COUNTERCLOCKWISE OPENING WITH RESILIENT SEATS. OPERATING NUT EXTENSION REQUIRED IF TOP OF NUT IS GREATER THAN 5 FT DEEP (SEE DETAIL FOR VALVE NUT EXTENSION)

2 / C9 GATE VALVE DETAIL

NTS

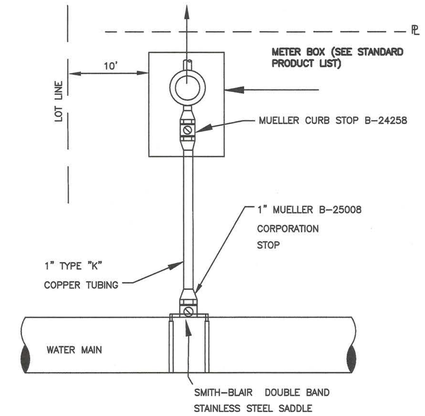

NOTE:

TAPS MUST BE IN EITHER THE 3:00 OR 9:00 O'CLOCK POSITION. NO TAPS WILL BE ALLOWED IN OTHER POSITIONS OF THE PIPE.

3 / C9 SINGLE WATER SERVICE DETAIL

NTS

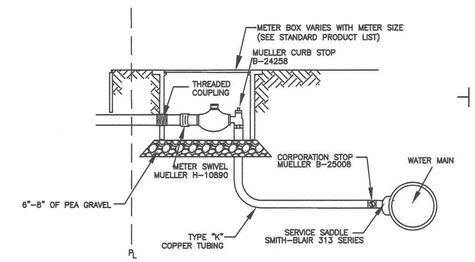

NOTE:

TAPS MUST BE IN EITHER THE 3:00 OR 9:00 O'CLOCK POSITION. NO TAPS WILL BE ALLOWED IN OTHER POSITIONS OF THE PIPE.

4 / C9 WATER SERVICE METER BOX DETAIL

NTS

THRUST BLOCKING NOTES

1. THRUST BLOCKING SHALL BE PLACED AGAINST UNDISTURBED SOIL.

2. CONCRETE THRUST BLOCKING SHALL BE PROVIDED WHERE CHANGES IN DIRECTION OCCURS, AT TEES, BENDS, CROSSES, CHANGES IN SIZES, STOPS(DEAD ENDS), VALVES, AND OR AS SHOWN BELOW.

3. CONTRACTOR SHALL USE THE FOLLOWING TABLE OF DIMENSIONS FOR THRUST BLOCKING AREA.

THRUST BLOCK SCHEDULE

PIPE SIZE	A PLUGS& TEES	B 90° B	C 45° B	D GATE VALVES
4" OR 6"	1'0"	1-2"	1-2"	1'0"
8"	1'3"	1-6"	1-6"	1'0"
12"	2'8"	3'0"	2'3"	1'0"
16" & LARGER	3'8"	4'0"	3'0"	2'0"

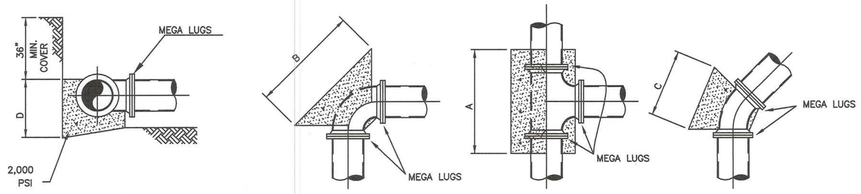

ALL FITTINGS

90° BENDS

TEE

ALL OTHER BENDS

MEGA LUGS

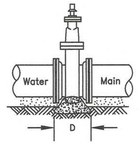

5 / C9 THRUST BLOCK DETAIL

NTS

NOTE: WATER MAINS DEEPER THAN THAT ALLOWED BY THE CITY OF KERRVILLE SPECIFICATIONS WILL REQUIRES SPECIAL WRITTEN PERMISSION FROM THE CITY ENGINEER.

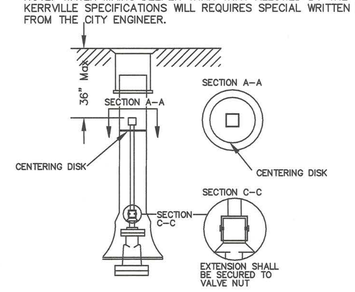

6 / C9 VALVE EXTENSION DETAILS

NTS

REVISIONS

ITEM/DATE/DESCRIPTION

Hewitt Engineering Inc.
Consulting Engineering Services
716 Barnett Street ◆ Kerrville, Texas 78028 ◆ 830.315.8800
TBPE Registration No. F-10739 ◆ www.hewitt-inc.com

PETER LEWIS
ARCHITECT + ASSOCIATES
334 West Water Street Kerrville, TX 78028
(830) 896-4220 Fax (830) 896-4226
www.pwlarchitect.com

STATE OF TEXAS
JOHN M. HEWITT
66142
LICENSED
PROFESSIONAL ENGINEER
SEALED
10/21/16

CITY OF KERRVILLE 1889 TEXAS

City of Kerrville Athletic Complex Field House

Kerrville, Texas

NOT PUBLISHED. ALL RIGHTS RESERVED BY ARCHITECT. DRAWINGS AND SPECIFICATIONS AS INSTRUMENTS OF SERVICE ARE AND SHALL REMAIN THE PROPERTY OF THE ARCHITECT. THEY SHALL NOT BE USED ON OTHER PROJECTS OR EXTENSIONS TO THIS PROJECT EXCEPT BY AGREEMENT IN WRITING AND WITH APPROPRIATE COMPENSATION. THE CONTRACTOR SHALL VERIFY ALL DIMENSIONS, FIELD FITTING AND CORRELATING DIMENSIONS AT JOB SITE. THE ARCHITECT WILL NOT BE RESPONSIBLE FOR CONSTRUCTION MEANS, METHODS, TECHNIQUES, SEQUENCES OR FOR SAFETY PRECAUTIONS AND PROGRAMS IN CONNECTION WITH THE PROJECT.

PROJECT NO. DATE

10/21/16

UTILITY DETAILS SHEET 1 OF 2

SHEET NUMBER

C9

CITY APPROVAL

These plans have been reviewed and approved by _____ on 10/21/16 (Date)

This approval will become void after one year of the indicated approval date. Exceptions to this approval are as followed

By approving these plans, the City of Kerrville does not assume any liability for engineering design nor does approval release the design engineer from liability for correction errors or omission in the design both during and after construction.

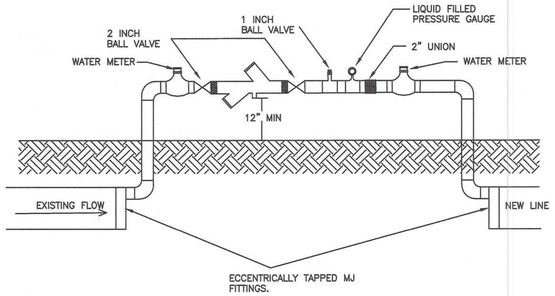

NOTES:

1. ALL PIPING CONFIGURATIONS OF THE BACKFLOW ASSEMBLY SHALL BE DONE WITH GALVANIZED PIPE.
2. BACKFLOW PREVENTION DEVICE (R.P.Z.) DESIGNATED BY CITY OF KERRVILLE STANDARD PRODUCT LIST.
3. THIS INSTALLATION APPROVED FOR TEMPORARY LINE LOADING ONLY.
4. RPZ MUST BE TESTED ACCORDING TO MOST RECENTLY ADOPTED CITY OF KERRVILLE PLUMBING CODE.

1 / C10 BACKFLOW PREVENTION FOR WATER MAIN LOADING

NTS

III

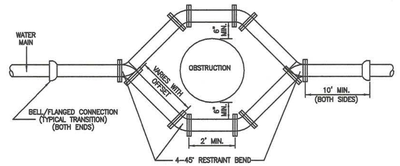

FOR A LINE TO PASS OVER AN OBSTRUCTION RATHER THAN UNDER, IT MUST HAVE ADEQUATE COVER AND BE APPROVED BY THE ENGINEERING DEPARTMENT.

MIN. PIPE WALL THICKNESS		
4"	–	0.250"
6"	–	0.280"
8"	–	0.322"
12" AND LARGER	–	0.375"

NOTES:

1. PIPE MATERIAL SHALL BE AWWA C900 PVC, DR-14, 200 PSI WITH INTEGRAL PVC RESTRAINED JOINTS.
2. OFFSET ASSEMBLY MUST PASS OVER THE OBSTRUCTION AS LONG AS THE MINIMUM CLEARANCE IS MAINTAINED. SPECIFIC APPROVAL FROM THE UTILITIES DEPARTMENT MUST BE GRANTED FOR THE OFFSET TO PASS UNDER THE OBSTRUCTION.
3. MATERIAL AND COATINGS SHALL BE IN ACCORDANCE WITH WATER MAIN STANDARD SPECIFICATIONS.
4. RESTRAIN EXISTING PIPING BEYOND OFFSET SECTION AS REQUIRED TO PREVENT MOVEMENT.
5. ALL PVC PRODUCTS MUST BE LISTED ON CITY OF SUGAR LAND'S APPROVED PRODUCTS LIST.

2 / C10 PVC WATER PIPE OFFSET ASSEMBLY

NTS

NOTE: SEWER MAINS DEEPER THAN THAT ALLOWED BY THE CITY OF KERRVILLE SPECIFICATIONS WILL REQUIRE SPECIAL WRITTEN PERMISSION FROM THE CITY ENGINEER.

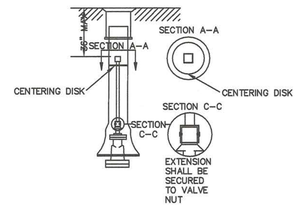

3 / C10 VALVE EXTENSION DETAIL

NTS

LATERAL CONNECTION TO EXISTING SEWER MAIN/STUB-OUT

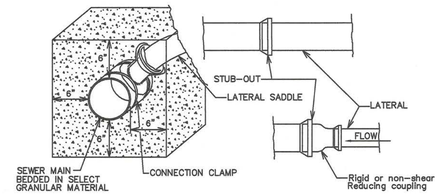

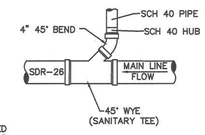

NOTE:
SERVICE TAPS TO BE INSTALLED AT EITHER 9:00 THRU 11:00 OR 1:00 THRU 3:00 O'CLOCK POSITIONS.

4 / C10 SEWER TAP DETAIL

NTS

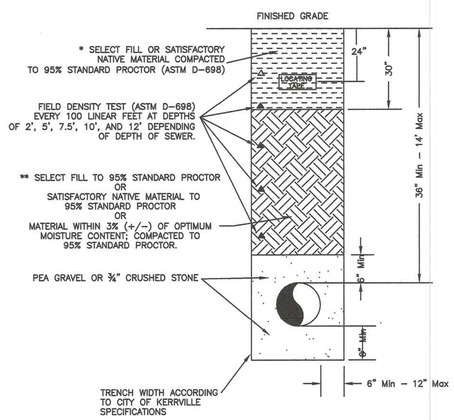

NOTES:

* MOISTURE SENSITIVE MATERIAL COMPACTED TO 95% STANDARD PROCTOR AND WITHIN 3% (+/-) OF OPTIMUM MOISTURE CONTENT MAY BE USED WHERE WATER LINE IS NOT UNDERNEATH PAVEMENT.

** MODIFIED PROCTOR (ASTM-1557) MUST BE USED AT DEPTHS GREATER THAN 10 FEET.

▲ REPRESENTS FIELD DENSITY TEST LOCATION

INSTALLATION OF PIPE TO FOLLOW CITY OF KERRVILLE SUBDIVISION SPECIFICATIONS

5 / C10 SEWER LINE EMBEDMENT & FIELD DENSITY TESTING

NTS

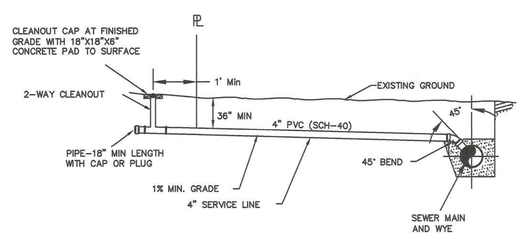

IF CLEANOUT IS INSTALLED AT OR IN DRIVEWAY, CAST IRON OR BRONZE CLEANOUT BOX PLACED IN CONCRETE FLUSH WITH SURFACE OF DRIVE

TOP OF SERVICE STACK SHALL BE OF SUFFICIENT DEPTH TO PROVIDE ADEQUATE FALL FROM THE FACILITY TO BE SERVED

CONNECTION DOWN TO 7'-0" USE STANDARD SERVICE CONNECTION

DEEP SERVICE CONNECTIONS APPLY WHEN DEEPER THAN 7'-0"

6 / C10 STANDARD SERVICE DETAIL

NTS

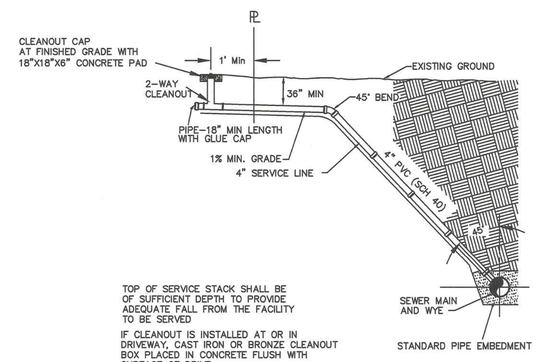

TOP OF SERVICE STACK SHALL BE OF SUFFICIENT DEPTH TO PROVIDE ADEQUATE FALL FROM THE FACILITY TO BE SERVED

IF CLEANOUT IS INSTALLED AT OR IN DRIVEWAY, CAST IRON OR BRONZE CLEANOUT BOX PLACED IN CONCRETE FLUSH WITH SURFACE OF DRIVE

CONNECTION DOWN TO 7'-0" STANDARD SERVICE CONNECTION

DEEP SERVICE CONNECTIONS APPLY WHEN DEEPER THAN 7'-0"

7 / C10 DEEP SEWER SERVICE DETAIL

NTS

CITY APPROVAL

These plans have been reviewed and approved by _____ on 10/31/16 (Date)

This approval will become void after one year of the indicated approval date. Exceptions to this approval are as followed

By approving these plans, the City of Kerrville does not assume any liability for engineering design nor does approval release the design engineer from liability for correction errors or omission in the design both during and after construction.

REVISIONS

ITEM/DATE/DESCRIPTION

Hewitt Engineering Inc.
Consulting Engineering Services
716 Barnett Street ◆ Kerrville, Texas 78028 ◆ 830.315.8800
TBPE Registration No. F-10739 ◆ www.hewitt-inc.com

PETER LEWIS ARCHITECT + ASSOCIATES
334 West Water Street Kerrville, TX 78028
(830) 896-4220 Fax (830) 896-4226
www.pwlarchitect.com

STATE OF TEXAS
JOHN M. HEWITT
66142
LICENSED
PROFESSIONAL ENGINEER
10/21/16

CITY OF KERRVILLE 1889 TEXAS

City of Kerrville Athletic Complex Field House

Kerrville, Texas

NOT PUBLISHED. ALL RIGHTS RESERVED BY ARCHITECT. DRAWINGS AND SPECIFICATIONS AS INSTRUMENTS OF SERVICE ARE AND SHALL REMAIN THE PROPERTY OF THE ARCHITECT. THEY SHALL NOT BE USED ON OTHER PROJECTS OR EXTENSIONS TO THIS PROJECT EXCEPT BY AGREEMENT IN WRITING AND WITH APPROPRIATE COMPENSATION TO THE ARCHITECT. CONTRACTORS SHALL VERIFY ALL FIGURES AND CORRELATING DIMENSIONS AT JOB SITE. THE ARCHITECT WILL NOT BE RESPONSIBLE FOR CONSTRUCTION MEANS, METHODS, TECHNIQUES, SEQUENCES OR FOR SAFETY PRECAUTIONS AND PROGRAMS IN CONNECTION WITH THE PROJECT.

PROJECT NO. DATE

10/21/16

UTILITY DETAILS SHEET 2 OF 2

SHEET NUMBER

C10

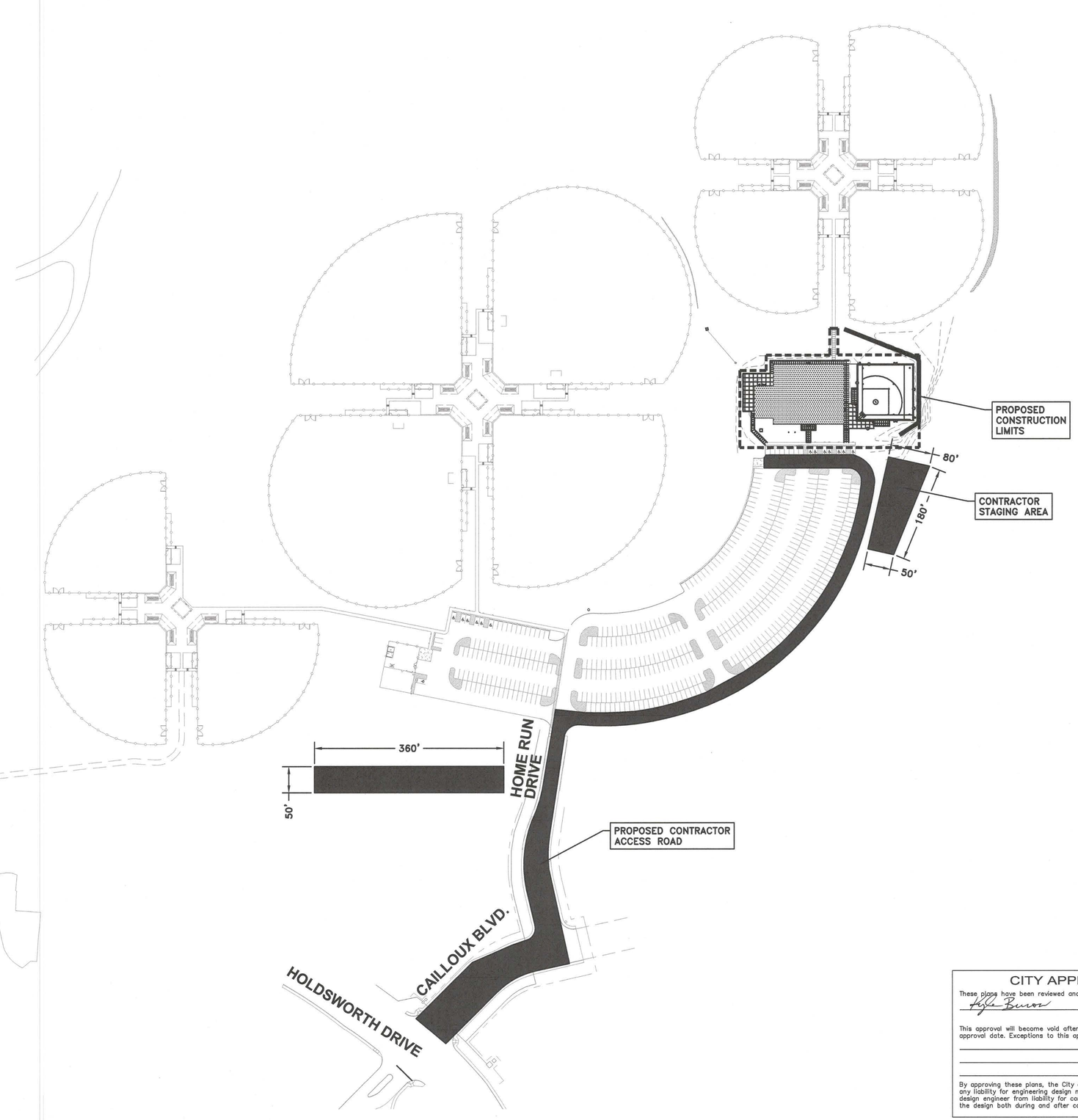

0 100 200
50 150
SCALE: 1"=100'

REVISIONS

ITEM/DATE/DESCRIPTION

Hewitt Engineering Inc.
Consulting Engineering Services
716 Barnett Street ◆ Kerrville, Texas 78028 ◆ 830.315.8800
TBPE Registration No. F-10739 ◆ www.hewitt-inc.com

PETER LEWIS
ARCHITECT + ASSOCIATES
334 West Water Street Kerrville, TX 78028
(830) 896-4220 Fax (830) 896-4226
www.pwlarchitect.com

STATE OF TEXAS
JOHN M. HEWITT
66142
LICENSED
PROFESSIONAL ENGINEER
10/21/16

CITY OF KERRVILLE 1889 TEXAS

City of Kerrville Athletic Complex Field House

Kerrville, Texas

NOT PUBLISHED. ALL RIGHTS RESERVED BY ARCHITECT. DRAWINGS AND SPECIFICATIONS AS INSTRUMENTS OF PROFESSIONAL SERVICE SHALL REMAIN THE PROPERTY OF THE ARCHITECT. THEY SHALL NOT BE USED ON OTHER PROJECTS OR EXTENSIONS TO THIS PROJECT EXCEPT BY AGREEMENT IN WRITING AND WITH APPROPRIATE COMPENSATION TO THE ARCHITECT. CONTRACTOR IS RESPONSIBLE FOR CONFIRMING AND CORRELATING DIMENSIONS, QUANTITIES, AND DETAILS. ARCHITECT WILL NOT BE RESPONSIBLE FOR CONSTRUCTION MEANS, METHODS, TECHNIQUES, SEQUENCES OR FOR SAFETY PRECAUTIONS AND PROGRAMS IN CONNECTION WITH THE PROJECT.

PROJECT NO. DATE

10/21/16

CITY APPROVAL

These plans have been reviewed and approved by
Alfa Burrow on 10/31/16
Date

This approval will become void after one year of the indicated approval date. Exceptions to this approval are as followed

By approving these plans, the City of Kerrville does not assume any liability for engineering design nor does approval release the design engineer from liability for correction errors or omission in the design both during and after construction.

CONTRACTOR STAGING AREA MAP

SHEET NUMBER

C11

KERRVILLE SPORTS COMPLEX
HORIZONTAL AND VERTICAL CONTROL

STATE OF TEXAS
REGISTERED
JEFF BOERNER
4939
PROFESSIONAL
LAND SURVEYOR

FEBRUARY 3, 2016

CITY APPROVAL

THESE PLANS HAVE BEEN REVIEWED AND APPROVED BY

_____ ON _____

KYLE BUROW

THIS APPROVAL WILL BECOME VOID AFTER ONE YEAR OF THE INDICATED APPROVAL DATE. EXCEPTIONS TO THIS APPROVAL ARE AS FOLLOWS:

_____

_____

_____

BY APPROVING THESE PLANS, THE CITY OF KERRVILLE DOES NOT ASSUME ANY LIABILITY FOR ENGINEERING DESIGN NOR DOES APPROVAL RELEASE THE DESIGN ENGINEER FROM LIABILITY FOR CORRECTION ERRORS OR OMISSION IN THE DESIGN BOTH DURING AND AFTER CONSTRUCTION.

MDS LAND SURVEYING CO., INC.
8 SPENCER RD.
BOERNE, TEXAS 78006
PHONE: (830) 816-1818
EMAIL: MDSINC@GVTC.COM
FIRM# 10019600

JOB NO.:	
DATE: 04/16/2015	
DRAWN BY: CJJ	
CHECKED BY: CJJ	
SHEET: 1 OF 1	

LEGEND

SCX	SET CHISLED "X"
SCS	SET COTTON SPINDLE
SIR	SET IRON ROD
FIR	FOUND IRON ROD
◎	HORIZONTAL & VERTICAL CONTROL POINT
⊙	HORIZONTAL CONTROL POINT
△	VERTICAL CONTROL POINT

HORIZONTAL & VERTICAL CONTROL

POINT NO.	NORTHING	EASTING	ELEVATION	DESCRIPTION
100	13937127.58	1922000.90	1661.70'	SIR YELLOW PLASTIC CAP "CONTROL"
101	13937106.74	1922205.10	1665.53'	SMAG
129	13937293.03	1921743.76	1661.56'	SCS IN POWER POLE
5784	13937441.47	1921500.41	–	FIR RED PLASTIC CAP "VOELKEL"
5786	13937085.15	1921573.09	–	FIR RED PLASTIC CAP "VOELKEL"
5787	13934176.75	1922020.84	–	FIR RED PLASTIC CAP "VOELKEL"
5788	13934115.61	1922192.86	–	FIR RED PLASTIC CAP "VOELKEL"
5790	13934482.15	1922253.77	–	FIR RED PLASTIC CAP "MATKIN-HOOVER"
5796	13937002.05	1922211.36	–	FIR
5800	13936472.63	1922699.96	–	FIR
5801	13936529.86	1922838.77	–	FIR PLASTIC CAP "C DIGGES"
5804	13935440.56	1923133.32	–	FIR
5805	13935670.95	1923045.87	–	FIR
5806	13935137.01	1923213.44	–	FIR
5809	13937255.42	1921942.11	–	FIR RED PLASTIC CAP "MATKIN-HOOVER"
5811	13938256.95	1921825.74	–	FIR
5816	13941113.89	1922763.16	–	FIR
5820	13939699.26	1923830.44	–	FIR
5826	13938256.60	1925125.27	–	FIR
5827	13938060.61	1925389.74	–	FIR
5828	13937949.79	1925579.31	–	FIR
5829	13937836.22	1925911.27	–	FIR
5832	13935264.05	1923340.47	–	FIR PLASTIC CAP "C DIGGES"
5833	13935732.20	1923183.18	–	FIR PLASTIC CAP "C DIGGES"
5845	13937378.37	1921141.28	–	FIR
5851	13937473.57	1920533.88	–	FIR RED PLASTIC CAP "MATKIN-HOOVER"
5855	13937537.60	1920667.82	–	FIR PLASTIC CAP "LCRA"
5857	13937617.06	1920912.35	–	FIR
5867	13939193.31	1921415.86	–	FIR RED PLASTIC CAP "VOELKEL"
5868	13936902.96	1921610.10	–	F60D
9341	13936568.08	1922159.34	1661.08'	SCX IN CON

NOTES

1) HORIZONTAL DATUM: CITY OF KERRVILLE COORDINATE SYSTEM, TEXAS STATE PLANE COORDINATE SYSTEM, SOUTH CENTRAL ZONE, NAD83, US SURVEY FEET, GRID.
2) VERTICAL DATUM: CITY OF KERRVILLE COORDINATE SYSTEM NAVD29, US SURVEY FEET.
3) HORIZONTAL AND VERTICAL CONTROL SHALL BE FIELD VERIFIED BY CONTRACTOR AND THE SURVEYOR SHALL BE NOTIFIED OF ANY DISCREPANCIES BEFORE PROCEEDING WITH CONSTRUCTION.

REVISIONS

ITEM/DATE/DESCRIPTION

Hewitt Engineering Inc.
Consulting Engineering Services
716 Barnett Street ◆ Kerrville, Texas 78028 ◆ 830.315.8800
TBPE Registration No. F-10739 ◆ www.hewitt-inc.com

PETER LEWIS
ARCHITECT + ASSOCIATES
334 West Water Street Kerrville, TX 78028
(830) 896-4220 Fax (830) 896-4226
www.pelarchitect.com

CITY OF KERRVILLE 1889 TEXAS

City of Kerrville Athletic Complex Field House

Kerrville, Texas

NOT PUBLISHED. ALL RIGHTS RESERVED BY ARCHITECT. DRAWINGS AND SPECIFICATIONS AS INSTRUMENTS OF SERVICE ARE AND SHALL REMAIN THE PROPERTY OF THE ARCHITECT. THEY ARE NOT TO BE USED ON OTHER PROJECTS OR EXTENSIONS TO THIS PROJECT EXCEPT BY AGREEMENT IN WRITING AND WITH APPROPRIATE COMPENSATION TO THE ARCHITECT. CONTRACTOR IS RESPONSIBLE FOR CONFIRMING AND CORRELATING DIMENSIONS AT JOB SITE. THE ARCHITECT IS NOT RESPONSIBLE FOR CONSTRUCTION METHODS OR TECHNIQUES, SEQUENCES OR FOR SAFETY PRECAUTIONS AND PROGRAMS IN CONNECTION WITH THE PROJECT.

PROJECT NO. DATE

10/21/16

SURVEY HORIZ. AND VERT. CONTROL PLAN

SHEET NUMBER

C12